Achieving a Satisfactory Motor Carrier Safety Record

provided by

UTC
Washington Utilities and Transportation Commission

updated April 2015

Disclaimer:

- **THIS MANUAL IS NOT INTENDED TO BE A COMPLETE REFERENCE. USE IT ONLY AS A GUIDE IN COMPLYING WITH STATE AND FEDERAL SAFETY REGULATIONS.**
- **DO NOT USE THIS MANUAL AS THE BASIS FOR LEGAL INTERPRETATIONS.**

DO YOU KNOW . . .

HOW TO ACHIEVE A SATISFACTORY SAFETY RECORD?

Operators of commercial motor vehicles must comply with applicable state and federal safety regulations. This includes:

Private carriers	Tractor/trailers
For hire carriers	Passenger Vehicles
Trucks	Solid Waste collectors

Most companies operating commercial motor vehicles are subject to Compliance Reviews (CR). Personnel of the Washington Utilities and Transportation Commission (UTC), Federal Motor Carrier Safety Administration (FMCSA), or the Washington State Patrol (WSP) conduct the Reviews to measure carriers' compliance with applicable safety regulations.

The UTC distributes this manual to assist carriers in understanding applicable rules and being prepared for Safety Compliance Reviews.

Compliance with safety regulations requires that companies complete and maintain various safety forms. This manual contains sample copies of many of the required forms. Unless your company has already done so, complete the applicable forms and maintain the completed forms at your principal place of business. **Please make as many copies of each form as you need**. We provide these sample forms as a courtesy to carriers. Carriers are not required to use these specific forms, they may use substitute forms obtained from other sources. Carriers must have all applicable driver and equipment safety records available for inspection when requested.

If you have questions or require additional information, please call:

Washington Utilities and Transportation Commission
Motor Carrier Safety
1300 South Evergreen Park Drive SW
P. O. Box 47250
Olympia, WA 98504-7250
(360) 664-1244
FAX: (360) 586-1150
http://www.utc.wa.gov

NOTE: This publication not intended for sale.

Table of Contents

Introduction **5**
Abbreviations & Acronyms **7**
Definitions **9**
Section 1
Controlled Substances and Alcohol Use Testing (49 CFR, Part 382 and Part 40)..... **15**
Section 2
Commercial Driver's License Standards Requirements and Penalties
(49 CFR, Part 383) **59**
Section 3
Qualifications of Drivers (49 CFR, Part 391) **67**
Section 4
Driver Operation (49 CFR, Part 392) **115**
Section 5
Insurance Requirements **121**
Section 6
Parts and Accessories Necessary For Safe Operation (49 CFR, Part 393) **139**
Section 7
Accidents **147**
Section 8
Drivers Hours of Service (49 CFR, Part 395) **157**
Section 9
Inspection Repair and Maintenance (49 CFR, Part 396) **179**
Section 10
Transportation of Hazardous Material (49 CFR, Part 397) **205**
Section 11
Commercial Vehicle Safety Alliance **209**
Section 12
Safety Compliance Review **217**
Section 13
Suggestions for Establishing an Effective Safety Program **223**
Section 14
Marking of Vehicles **229**
Section 15
Bus Operations **233**
Section 16
Record Keeping Requirements of the Federal Motor Carrier Safety Regulation **241**
Section 17
Leasing Requirements **253**
Section 18
CSA (Compliance, Safety & Accountability) **261**

INTRODUCTION

The Washington Utilities and Transportation Commission (UTC) administers and enforces Washington Administrative Code regulations (WAC), federal safety rules (FMCFR) and state laws (RCW) relating to motor vehicle safety.

Safety Program Mission:

- To enforce state and federal laws, rules and regulations.
- To educate motor carriers and general public.
- To assist motor carriers in achieving and maintaining compliance.

Safety Program Objectives:

- To reduce commercial motor vehicle accidents.
- To decrease fatalities, injuries and property losses involving commercial motor vehicles.

Purpose of This Manual:

- This manual is designed to assist carriers in gaining a basic knowledge of the laws and rules relating to motor carrier safety.

Disclaimer:

- **THIS MANUAL IS NOT INTENDED TO BE A COMPLETE REFERENCE.** Use it only as a guide in complying with state and federal safety regulations.
- **DO NOT** use this manual as the basis for legal interpretations.

FEDERAL SAFETY REGULATIONS:

The public may review copies of federal safety regulations at the UTC branch of the Washington State Library, located in the Olympia Headquarters offices of the Commission. You may obtain copies from:

- The UTC (subject to pertinent copying charges).
- The Government Printing Office, Seattle, Washington.
- Web page http://www.fmcsa.dot.gov.
- Numerous other private vendors.

UTC SAFETY REGULATIONS:

For those carriers subject to Commission regulation, the UTC publishes rulebooks containing complete carrier regulations (excluding Federal Regulations). The rulebooks are available, free of charge, by contacting:

Washington Utilities and Transportation Commission
Attn: Records Center
1300 S Evergreen Park Drive SW
P. O. Box 47250
Olympia, Washington 98504-7250
Telephone: (360) 664-1234
FAX: (360) 586-1150

Note: Carriers are responsible for knowing and complying with all state and federal safety regulations, whether or not they are discussed in this manual.

ABBREVIATIONS AND ACRONYMS

The following abbreviations and acronyms are used throughout this manual:

Abbreviation/Acronym	Meaning
BAC	Breath Alcohol Concentration
BASIC	Behavior Analysis Safety Improvement Categories
BAT	Breath Alcohol Technician
CDL	Commercial Driver's License
CDLIS	Commercial Driver's License Information System
CFR	Code of Federal Regulations
CMV	Commercial Motor Vehicle
Commission	Washington Utilities and Transportation Commission
CSL	Combined Single Limit
CSA	Compliance Safety Accountability
CVSA	Commercial Vehicle Safety Alliance
DHHS	Department of Health and Human Services (federal)
DOL	Department of Licensing
DOT	Department of Transportation (federal)
DVIR	Driver Vehicle Inspection Report
EBT	Evidential Breath Testing Device
FHWA	Federal Highway Administration
FMCSA	Federal Motor Carrier Safety Administration
FMCSR	Federal Motor Carrier Safety Regulation
FMVSS	Federal Motor Vehicle Safety Standards
GCVWR	Gross Combined Vehicle Weight Rating
GVWR	Gross Vehicle Weight Rating
HAZMAT	Hazardous Material
HMR	Hazardous Material Regulation
HMT	Hazardous Material Transportation
MCSR	Motor Carrier Safety Regulation
MRO	Medical Review Officer
MV	Motor Vehicle
NAS	North American Standard
NHTSA	National Highway Traffic Safety Administration
RCW	Revised Code of Washington (state statutes)
RODS	Records of Duty Status
SAP	Substance Abuse Professional
SMS	Safety Measurement System
UL	Underwriters' Laboratory Rating
USDOT	United States Department of Transportation
UTC	Utilities and Transportation Commission
WAC	Washington Administrative Code
WSP	Washington State Patrol
WUTC	Washington Utilities and Transportation Commission

DEFINITIONS

Accident means an occurrence involving a commercial motor vehicle operating on a highway in interstate or intrastate commerce that results in:

(i) A fatality.

(ii) Bodily injury to a person who, as a result of the injury, immediately receives medical treatment away from the scene of the accident.

(iii) One or more motor vehicles incurring disabling damage as a result of the accident, requiring the motor vehicles to be transported away from the scene by a tow truck or other motor vehicle.

Adverse driving conditions means snow, sleet, fog, other adverse weather conditions, a highway covered with snow or ice, or unusual road and traffic conditions, none of which were apparent on the basis of information known to the person dispatching the run at the time it was begun.

Alcohol means the intoxicating agent in beverage alcohol, ethyl alcohol, or other low molecular weight alcohols including methyl and isopropyl alcohol.

Auto Transportation Vehicle means any motor-propelled vehicle used in Auto Transportation operations.

Charter Bus and Excursion Bus means any vehicle with a seating capacity for seven or more persons, excluding the driver.

Collection Site means a place where individuals present themselves for the purpose of providing breath, body fluid, or tissue samples to be analyzed for specific controlled substances.

Commerce when used in this document means the exchange or buying and selling of commodities (products and services), involving transportation from place to place

Commercial Driver's License (CDL) means a license issued in accordance with the requirements of 49 CFR, Part 383, to an individual that authorizes the individual to drive a class of commercial motor vehicle.

Commercial Motor Vehicle (CMV) (General definitions) means any self-propelled or towed motor vehicle used on a public highway in commerce, to transport passengers or property, when the vehicle:

(1) Has a gross vehicle weight rating or gross combination weight rating, or gross vehicle weight or gross combination weight, of 4,536 kg (10,001 pounds) or more, whichever is greater.

(2) Is designed or used to transport more than 8 passengers, including the driver, for compensation.

(3) Is designed or used to transport more than 15 passengers, including the driver and is not used to transport passengers for compensation.

(4) Is used in transportation of material found by the Secretary of USDOT to be hazardous under 49 U.S.C. 5103 and transported in a quantity requiring placarding under Regulations prescribed by the Secretary under 49 CFR, subtitle B, Chapter I, subchapter C.

Exceptions to general definitions of CMV:

(a) Vehicles operating as Auto Transportation Carriers, Charter Carriers, or Excursion Carriers as defined in Chapter 81.68 RCW, and 8l.70 RCW, respectively.
(b) If the vehicle is a school bus as defined in RCW 46.04.521, regardless of weight or size.
(c) Vehicles operating under the provisions of RCW 46.25.010(6), exclusively in intrastate commerce.

Common Carrier means any person who undertakes to transport property, including general commodities, household goods, materials transported by armored car service and/or hazardous materials, for the general public, for compensation over the public highways of the State of Washington.

Controlled Substances means the presence of the following substances:

(a) Marijuana
(b) Cocaine
(c) Opiates
(d) Amphetamines
(e) Phencyclidine (PCP)

Disabling Damage means damage that precludes departure of a motor vehicle from the scene of the accident, in its usual manner, in daylight, after simple repairs.

(1) Inclusions: Damage to motor vehicles that could have been driven, but would have been further damaged if so driven.
(2) Exclusions:
    (i) Damage that can be remedied temporarily at the scene of the accident without special tools or parts.
    (ii) Tire disablement without other damage, even if no spare tire is available.
    (iii) Headlight or taillight damage.
    (iv) Damage to turn signals, horns, or windshield wipers that make them inoperative.

Driving Time means all time spent at the driving controls of a commercial motor vehicle in operation.

Farm Vehicle Driver means a person who drives only a commercial motor vehicle that is controlled and operated by a farmer as a private motor carrier of property, if the vehicle:

(1) Is being used to transport either:
    (a) Agricultural products.
    (b) Farm machinery, farm supplies, or both, to or from a farm.
(2) Is not being used in the operation of a for-hire motor carrier.
(3) Is not carrying hazardous materials of a type or quantity that requires the commercial motor vehicle to be placarded in accordance with §177.823 of Title 49 CFR.
(4) Is being used within 150 air miles of the farmer's farm.

For-hire Motor Carrier means a person engaged in the transportation of goods or passengers for compensation.

Gross Combination Weight Rating means the value specified by the manufacturer as the loaded weight of a combination (articulated) motor vehicle.

Gross Vehicle Weight Rating means the value specified by the manufacturer as the loaded weight of a single motor vehicle.

Hazardous Material means a substance or material that has been determined by the Secretary of Transportation to be capable of posing an unreasonable risk to health, safety, and property when transported in commerce, and that has been so designated.

Interstate Commerce means trade, traffic, or transportation:

(1) Between a place in a state and a place outside of such state (including a place outside the United States).
(2) Between two places in a state through another state or a place outside of the United States.
(3) Between two places in a state as part of trade, traffic, or transportation originating or terminating outside the state or the United States.

Intrastate Commerce means any trade, traffic, or transportation in any state from point A to point B within the State and not destined for interstate commerce.

Medical Review Officer means a licensed Medical Doctor or Doctor of Osteopathy with knowledge of drug abuse disorders who is employed or used by a motor carrier to conduct drug testing in accordance with 49 CFR, Part 40.

Multiple-employer driver means a driver, who in any period of seven consecutive days, is employed or used as a driver by more than one motor carrier.

On-duty Time means all time from the time a driver begins work, or is required to be in readiness to work, until the time he/she is relieved from work and all responsibility for performing work, including:

(1) All time at a carrier or shipper plant, terminal, or facility, or other property, or on any public property waiting to be dispatched, unless the driver has been relieved from duty by the motor carrier.
(2) All time inspecting, servicing, or conditioning any commercial motor vehicle, at any time.
(3) All driving time.
(4) All time, other than driving time, in or on any commercial motor vehicle except time spent resting in a sleeper berth.
(5) All time loading or unloading a vehicle, supervising, or assisting in the loading of unloading, attending a vehicle being loaded or unloaded, remaining in readiness to operate the vehicle, or in giving or receiving receipts for shipments loaded or unloaded.
(6) All time repairing, obtaining assistance, or remaining in attendance on a disabled vehicle.
(7) As of February 27, 2012, on duty time does not include any time resting in a parked vehicle (property or passenger carriers) or up to two hours riding in the passenger seat of a moving property carrier vehicle immediately before or after a period of at least 8 consecutive hours in the sleeper berth.

Out-of-service Order means a declaration by an authorized enforcement officer of a federal, state, Canadian, Mexican or local jurisdiction that a driver, a commercial motor vehicle, or a motor carrier operation, is out of service pursuant to CFR 49 Parts 386.72, 392.5, 395.13, 396.9, or compatible laws, or the North American Uniform Out-of-Service Criteria.

Principal Place of Business means the single location designated by the motor carrier, normally its headquarters, for purposes of identification under 49 CFR. The motor carrier must make records required by Title 49 CFR available for inspection at this location within 48 hours (Saturdays, Sundays, and Federal holidays excluded) after a request has been made by a special agent or authorized representative of the FMCSA, UTC or WSP.

Private Motor Carrier means a person who provides transportation of property or passengers, by commercial motor vehicle, and is not a for-hire carrier.

Private Non-profit Commercial Motor Vehicle means any motor vehicle designed to transport sixteen or more passengers, including the driver.

Private Non-profit Motor Vehicle means any self-propelled vehicle with seating capacity of seven or more persons, including the driver.

Private Non-profit Provider means a private, non-profit corporation providing transportation services for compensation, to persons with special transportation needs.

Reasonable suspicion means that the motor carrier believes the actions, appearance, or conduct of a commercial motor vehicle driver who is on duty as defined, are indicative of the use of a controlled substance.

Registered Carrier means a carrier operating in interstate or foreign commerce under authority issued
by the Federal Motor Carrier Safety Administration.

Registered Exempt Carrier means a carrier operating in interstate or foreign commerce under the exemptions of the Federal Motor Carrier Act, without interstate authority issued by the Federal Motor Carrier Safety Administration.

Safety-sensitive Function means:

(1) Time at a carrier or shipper plant, terminal, facility, or other property, waiting to be dispatched.
(2) Time inspecting equipment as required by 49 CFR, 392.8, or otherwise inspecting, servicing, or conditioning a commercial motor vehicle.
(3) Time spent driving.
(4) Time spent in or on any commercial vehicle (excluding sleeper berth time).
(5) Time spent loading or unloading a vehicle, supervising or assisting in the loading or unloading, attending a vehicle being loaded or unloaded, remaining in readiness to operate the vehicle, or in giving or receiving receipts for shipments loaded or unloaded.
(6) Time spent performing driver requirements relating to accidents.
(7) Time spent repairing, obtaining assistance, or remaining in attendance on a disabled vehicle.

School Bus Operation means the use of a school bus to transport school children and/or school personnel from home to school and from school to home, and to school sponsored events. School bus does not include a bus used as a common carrier.

Sleeper berth means a berth conforming to the requirements of 49 CFR, Part 393.76.

Section 1

Controlled Substances And Alcohol Use Testing

(49 CFR, Part 382 and Part 40)

APPLICABILITY:

These rules apply to drivers who are required to possess a commercial driver's license (CDL). This includes:

- For-hire and private carriers.
- Federal, state, local, and tribal governments.
- Apiaries industries.
- Church and civic organizations.

Exemptions – interstate and intrastate:

- Active duty military personnel.

Exemptions – Washington intrastate only:

- Farmer in vehicle licensed for no more than 40,000 pounds and hauling agricultural products, supplies, or machinery within 150 miles of the farm, and not used in common or contract carrier operations.
- Fire fighter or law enforcement officer that has a certification of completion of specialized training course approved by the Department of Licensing.
- Recreational vehicle for non-commercial uses.

Subpart B – Prohibitions

The following are prohibitions for drivers and/or motor carriers regarding controlled substance and/or alcohol use during the performance of safety-sensitive functions:

§382.201	Alcohol concentration
§382.205	On-duty use
§382.207	Pre-duty use
§382.209	Use following an accident
§382.211	Refusal to submit to a required alcohol or controlled substances test
§382.213	Controlled substances use
§382.215	Controlled substances testing

*NOTE: Positive controlled substance and/or alcohol tests will require a driver to be removed from safety-sensitive functions.

TYPES OF CONTROLLED SUBSTANCE AND ALCOHOL TESTS TO BE PERFORMED:

- Pre-employment (controlled substance only)
- Post-accident
- Random
- Reasonable suspicion
- Return-to-duty
- Follow-up

Pre-employment: No employer shall allow a driver to perform a safety-sensitive function until they have received written notifications of a negative controlled substance test result.

Post-accident: Every driver involved in a recordable accident shall be tested for controlled substances and alcohol use if:

- The accident involved the loss of human life.
- If the driver received a citation and any vehicles involved in the accident were towed away from the scene.
- If the driver received a citation and any person(s) involved in the accident required immediate treatment away from the accident scene.

Post-Accident Drug & Alcohol Test Requirements		
Type of Accident	Citation issued to Driver?	Must test be performed by employer?
Involves human	Yes	Yes
fatality	No	Yes
Involves bodily injury with treatment away from accident scene	Yes	Yes
Disabling damage to any motor vehicle (requiring towing)	Yes	Yes

(1) Test should be conducted as soon as possible:
  (a) Alcohol within eight hours; and
  (b) Controlled substance within 32 hours.

(2) If testing cannot be conducted within time limits, carrier must document the reason.

Random: Carriers must randomly test their drivers according to the following rates. The tests must be unannounced and for alcohol testing, must be conducted immediately prior to, during, or immediately following a safety-sensitive function.

- Controlled substances: 50% of drivers over a twelve-month period.
- Alcohol: 10% of average number of driver positions, over a twelve-month period.

Reasonable Suspicion: Initiated by a trained supervisor who shall require a driver to submit to a controlled substance and/or alcohol use test when that supervisor has reasonable suspicion that a driver is in violation of the rules that prohibit the use of controlled substances and alcohol during safety-sensitive functions.

Return to duty: A driver who has engaged in conduct prohibited by subpart B of Part 382, shall undergo a return to duty alcohol test with an alcohol concentration of less than .02, and/or a negative controlled substance test, prior to performing any safety-sensitive function.

Follow-up: Applies to any driver who, upon referral by a Substance Abuse Professional (SAP) for engaging in conduct prohibited by subpart B of Part 382, must undergo follow-up testing. If referred, the driver must undergo a minimum of six (6) tests over a twelve-month period, for a maximum period of 60 months.

PREVIOUS EMPLOYER CONTROLLED SUBSTANCE & ALCOHOL TEST INQUIRY

Employers shall request alcohol and controlled substance testing information from previous employers in accordance with the requirements of 49 CFR, Part 40.25. This request shall be made pursuant to the employee's written consent.

The following information must be requested from previous DOT-regulated employers who have employed the employee for any period during the two years prior to the date of the employee's application:

- Alcohol tests with a result of 0.04 or higher alcohol concentration.
- Verified positive drug tests.
- Refusals to be tested (including verified adulterated or substituted drug test results).
- Other violations of DOT agency drug and alcohol testing regulations.
- With respect to any employee who violated DOT drug and/or alcohol regulations, if this information cannot be obtained from the previous employer, it shall be obtained from the employee.

If possible, this information should be obtained before the employee first performs safety-sensitive functions. If this is not possible, the employer must obtain and review the information as soon as possible. No employee shall be permitted to perform safety-sensitive functions after 30 days from the date on which the employee first performed safety-sensitive functions, unless the employer has obtained OR made and documented a good-faith effort to obtain the information.

This requirement applies only to employees seeking to begin performing safety-sensitive functions for employers for the first time (i.e., a new hire, an employee that transfers into a safety-sensitive position). If the employee refuses to provide written consent, the employer must not permit the employee to perform safety-sensitive functions.

RETENTION OF RECORDS - 49 CFR 382.401

One year:

- Negative and cancelled drug test results.
- Alcohol test results indicating a breath alcohol concentration less than 0.02.

Two years:

- Records related to the collection process and required training.

Five Years:

- Alcohol test results indicating a breath alcohol concentration (BAC) of 0.02 or greater.
- Verified positive drug test results.
- Any refusals to submit to required alcohol and/or drug tests.
- Required calibration results of EBT devices.
- Substance abuse professional's (SAP's) evaluations and referrals.
- Annual calendar year summary.

LOCATION OF REQUIRED RECORDS

- Must be maintained in a secure location.
- Must have limited access.
- Records shall be made available for inspection by authorized representatives of the FMCSA, UTC, and WSP.

SUPERVISOR TRAINING

- 60 minutes of training on alcohol abuse.
- 60 minutes of training on controlled substance abuse.
- Supervisors shall use this training to determine if reasonable suspicion testing is required on a driver.
- Training shall include physical, behavioral, speech, and performance indicators of alcohol and controlled substance misuse.

CONTROLLED SUBSTANCE AND ALCOHOL POLICY AND TRAINING

The employer shall provide educational materials that explain the following:

- The identity of carrier official designated to answer driver questions regarding controlled substance and alcohol testing.
- Which drivers are subject to Part 382.
- Information regarding what safety-sensitive functions are and when a driver is required to be in compliance with this part.
- What types of driver conduct are prohibited by Part 382.
- Procedures used in testing for controlled substances and alcohol.
- Explanation of what constitutes a refusal to submit to controlled substance and alcohol testing; and the consequences of such refusal.
- Requirement that a driver submit to required testing under Part 382.
- Consequences for any driver violating subpart B of Part 382.
- Information concerning the effects of controlled substance and alcohol use.

Each employer shall require each driver to sign a statement certifying that the driver has received the aforementioned information. This certification shall be maintained by the employer, subject to inspection by representatives of the FMCSA, UTC, and WSP.

ALCOHOL AND DRUG ABUSE POLICY

- The following information regarding the alcohol and drug abuse policy is provided as an example only. Companies are encouraged to use those portions of the attached draft policy applicable to their own operations, to add information specific to their company, and to confer with drug and alcohol enforcement specialists and/ or legal counsel in drafting a policy.
- The sample policy and procedure are based upon accurate information available at the time it was prepared.
- This sample is not prepared or intended to meet any particular company's needs.
- A company alcohol and drug abuse policy may create legal rights or liabilities between the parties involved.
- Legal advice regarding the development or review of this or any employment policy should be obtained.
- No one should rely solely upon this sample policy outside its intended purpose without first obtaining the appropriate advice of legal counsel.

ALCOHOL AND DRUG ABUSE POLICY
STATEMENT OF PURPOSE AND POLICY

Drivers are an extremely valuable resource for _____business. Their health and safety is a serious Company concern. Drug or alcohol use may pose a serious threat to driver health and safety. It is, therefore, the policy of the Company to prevent substance use or abuse from having an adverse effect on our drivers. The company maintains that the work environment is safer and more productive without the presence of alcohol, illegal or inappropriate drugs in the body or on company property. Furthermore, drivers have a right to work in an alcohol and drug-free environment and to work with drivers free from the effects of alcohol and drugs. Drivers who abuse alcohol or use drugs are a danger to themselves, their coworkers and the Company's assets.

The adverse impact of substance abuse by drivers has been recognized by the federal government. The Federal Motor Carrier Safety Administration (FMCSA) has issued regulations which require _____ to implement a controlled substance testing program. _____will comply with these regulations and is committed to maintaining a drug-free workplace. All drivers are advised that remaining drug free and medically qualified to drive are conditions of continued employment with _____.

Specifically, it is the policy of _____ that the use, sale, purchase, transfer, possession or presence in one's system of any controlled substance (except medically prescribed drugs) by any driver while on company premises, engaged in company business, while operating company equipment, or while under the authority of the Company is strictly prohibited.

FMCSA states that mandatory testing must apply to every person who operates a commercial motor vehicle in interstate or intrastate commerce and is subject to the CDL licensing requirement.

The execution and enforcement of this policy will follow set procedures to screen body fluids (urinalysis), conduct breath testing, and/or search all driver applicants for alcohol and drug use, and those drivers suspected of violating this policy who are involved in a US Department of Transportation (DOT) reportable accident or who are periodically or randomly selected pursuant to these procedures. These procedures are designed not only to detect violations of this policy, but also to ensure fairness to each driver. Every effort will be made to maintain the dignity of drivers or driver applicants involved. Disciplinary action will, however, be taken as necessary.

Neither this policy nor any of its terms are intended to create a contract of employment or to contain the terms of any contract of employment. The Company retains the sole right to change, amend or modify any term or provision of this policy without notice. This policy is effective_____, and will supersede all prior policies and statements relating to alcohol or drugs.

ADMINISTRATION GUIDE TO PERSONNEL ALCOHOL AND DRUG TESTING PROCEDURES

I. PURPOSE

The purpose of this administrative guide is to set forth the procedures for the implementation of controlled substances and alcohol use and testing of driver applicants and current drivers pursuant to the Alcohol and Drug Abuse Policy. These procedures are intended as a guide only, and are in no way intended to alter any existing relationship between _____ and any driver.

_____alcohol and drug program administrator designated to monitor, facilitate, and answer questions pertaining to these procedures is_____.

II. DEFINITIONS

When interpreting or implementing these procedures, or the procedures required by the Federal Motor Carrier Safety Administration (FMCSA) controlled substance testing regulations the following definitions apply:

"Alcohol" means the intoxicating agent in beverage alcohol, ethyl alcohol, or other low molecular weight alcohols including methyl and isopropyl alcohol.

"Alcohol concentration (or content)" means the alcohol in a volume of breath expressed in terms of
grams of alcohol per 210 liters of breath as indicated by an evidential breath test under this part.

"Collection site" means a place where individuals present themselves for the purpose of providing
breath, body fluid, or tissue samples to be analyzed for specified controlled substances. This site must possess all necessary personnel, materials, equipment, facilities and supervision to provide for the collection, security, temporary storage and transportation or shipment of the samples to a laboratory.

"Commercial motor vehicle" means a motor vehicle or combination of motor vehicles used in commerce to transport passengers or property if the motor vehicle:

1. Has a gross combination weight rating of 26,001 or more pounds.
2. Has a gross vehicle weight rating of 26,001 or more pounds.
3. Is designed to transport 16 or more passengers, including the driver.
4. Is of any size and is used in the transportation of materials found to be hazardous for the purposes of the Hazardous Materials Transportation Act and which require the motor vehicle to be placarded under the Hazardous Materials Regulations (49 CFR, Part 172, 1308).

"Driver" means any person who operates a commercial motor vehicle. This includes, but is not limited to: Full time, regularly employed drivers; casual, intermittent or occasional drivers; leased

drivers and independent, owner-operator contractors who are either directly employed by or under lease to an employer or who operate a commercial motor vehicle at the direction of or with the consent of an employer. For the purpose of pre-employment/pre-duty testing only, the term "driver" includes a person applying to an employer to drive a commercial motor vehicle.

"Drug" means any substance (other than alcohol) that is a controlled substance as defined in the section and 49 CFR, Part 40.

"FMCSA" means the Federal Motor Carrier Safety Administration, US Department of Transportation.

"Owner-operator" means a driver who has been contracted for services with the Company. For the purposes of these procedures and the Company's Alcohol and Drug Abuse Policy, owner-operators will be required to participate in the Company's Alcohol and Drug Abuse Policy like all Company employee drivers.

"Medical review officer" (MRO) means a licensed MD or DO with knowledge of drug abuse disorders that is employed or used by a motor carrier to conduct drug testing in accordance with this part.

"Performing a safety-sensitive function" means a driver is considered to be performing a safety-sensitive function during any period in which he/she is actually performing, ready to perform, or immediately available to perform any safety-sensitive functions.

"Reasonable cause" means that the motor carrier believes the actions or appearance or conduct of
a commercial motor vehicle driver who is on duty as defined below, are indicative of the use of a controlled substance.

"Safety-sensitive function" means any of those on-duty functions set forth in CFR 49, Section 395.2.

"On duty time" means all time from the time a driver begins to work or is required to be in readiness
to work until the time he/she is relieved from work and all responsibility for performing work. "On duty time" shall include:

1. All time at a carrier or shipper plant, terminal, or facility, or other property, or on any public property waiting to be dispatched, unless the driver has been relieved from duty by the motor carrier.
2. All time inspecting, servicing, or conditioning any commercial motor vehicle at any time.
3. All driving time.
4. All time, other than driving time, in or upon any commercial motor vehicle except time spent resting in a sleeper berth.
5. All time loading or unloading a vehicle, supervising, or assisting in the loading or unloading, attending a vehicle being loaded or unloaded, remaining in readiness

6. All time repairing, obtaining assistance, or remaining in attendance upon a disabled vehicle.

III. SUBSTANCES PROHIBITED/PRESCRIPTION MEDICATIONS

A. Alcohol use means the consumption of any beverage, mixture, or preparation, including any medication containing alcohol which, when consumed, causes an alcohol concentration in excess of those prescribed by Part 382, Subpart B, (FMCSR) and Section IV of this policy.

B. Controlled substances: In accordance with FHWA rules, urinalysis will be conducted to detect the presence of the following substances:

- Marijuana
- Cocaine
- Opiates
- Amphetamines
- Phencyclidine (PCP)

Detection levels requiring a determination of a positive result shall be in accordance with the guidelines adopted by the FMCSA in accordance with the recommendations established by Title 49 CFR, Part 40.

C. Prescription medications: Drivers taking legally prescribed medications issued by a licensed health care professional familiar with the driver's work-related responsibilities must report such use to their immediate supervisor or dispatcher, and may be required to present written evidence from the health care professional which describes the effects such medications may have on the driver's ability to perform his/her tasks.

In the sole discretion of the alcohol and drug program administrator, a driver may be temporarily removed, with pay, from a safety-sensitive position if deemed appropriate.

IV. PROHIBITIONS

A. Alcohol Prohibitions

The new alcohol rule prohibits any alcohol misuse that could affect performance of a safety-sensitive function, including:

1. Use while performing safety-sensitive functions.
2. Use during the 4 hours before performing safety-sensitive functions.
3. Reporting for duty or remaining on duty to perform safety-sensitive functions with an alcohol concentration of 0.04 or greater.
4. Possession of alcohol, unless the alcohol is manifested and transported as part of a shipment. This includes the possession of medicines containing alcohol (prescription or over-the-counter), unless the packaging seal is unbroken.

5. Use during 8 hours following an accident, or until he/she undergoes a post accident test.

6. Refusal to take a required test.

NOTE: A driver found to have an alcohol concentration of 0.02 or greater but less than 0.04 shall not perform, nor be permitted to perform, safety-sensitive functions for at least 24 hours. The other consequences imposed by the regulations and discussed below do not apply. However, documentation of this test constitutes written warning that company policy has been violated, and the next occurrence could result in termination of a driver.

B. Drug Prohibitions

The regulations prohibit any drug use that could affect performance of safety-sensitive functions, including:

1. Use of any drug, except by doctor's prescription, and then only if the doctor has advised the driver that the drug will not adversely affect the driver's ability to safely operate the CMV.
2. Testing positive for drugs.
3. Refusing to take a required test.

All drivers will inform the alcohol and drug program administrator of any therapeutic drug use prior to performing a safety-sensitive function.

V. DRIVER APPLICANT AND CURRENT DRIVER TESTING

A. Applicant Testing: All driver applicants will be required to submit to and pass a pre-employment breath alcohol test and a urine drug test as a condition of employment.

Driver applicants will not receive a firm offer of employment until a confirmed negative pre-employment alcohol and drug test. Driver applicants who have received firm employment offers are to be cautioned against giving notice at their current place of employment, or incurring any costs associated with accepting employment with the Company until after a negative pre-employment test has been received. Under no circumstances may a driver perform a safety-sensitive function until a confirmed negative result is received.

Driver applicant drug testing shall follow the collection, chain-of-custody and reporting procedures as set forth in 49 CFR, Part 40.

The term "driver" as used in these procedures includes owner-operators.

B. Every owner-operator engaged to provide services to the Company must agree to, and successfully participate in the Company's alcohol and drug testing program. All owner-operator agreements will be entered into by the Company contingent upon the operators' successful completion of urinalysis and breath analysis under all phases of the Company's program, and are contingent upon the owner-operator's continued status as a medically qualified driver.

C. Employee Drivers: Under all circumstances, when a driver is directed to provide either a breath test or urine sample (Appendix C) in accordance with these procedures, he/she must immediately comply as instructed. Refusal will constitute a positive result, and the driver will be immediately removed from the safety-sensitive function, and will be subject to further discipline or termination as appropriate.

1. Suspicion-based Testing

a. Reasonable Suspicion: If a driver is having work performance problems or displaying behavior that may be alcohol or drug-related, or is otherwise demonstrating conduct that may be in violation of the Policy where immediate management action is necessary, a supervisor or dispatcher, with the concurrence of the alcohol and drug program administrator, will require that driver to submit to a breath test or urinalysis.

The following conditions are signs of possible alcohol or drug use (not all-inclusive):

- Abnormally dilated or constricted pupils
- Glazed stare - redness of eyes
- Flushed face
- Change of speech (i.e. faster or slower)
- Constant sniffing
- Increased absences
- Redness under nose
- Sudden weight loss
- Needle marks
- Change in personality (i.e. paranoia)
- Increased appetite for sweets
- Forgetfulness - performance faltering - poor concentration
- Borrowing money from coworkers or seeking an advance of pay or other unusual displays of need for money
- Constant fatigue or hyperactivity
- Smell of alcohol
- Slurred speech
- Difficulty walking
- Excessive, unexplained absences
- Dulled mental processes

b. Supervisors or dispatchers must take action if they have reason to believe one or more of the above-listed conditions is indicated, and that the substance abuse is affecting a driver's job performance or behavior in any manner. A supervisor or dispatcher observing such conditions will take the following actions immediately:

- Confront the employee involved, and keep under direct observation until the situation is resolved.
- Secure the alcohol and drug program administrator's concurrence to observations; job performance and company policy violations must be specific.
- After discussing the circumstances with the supervisor or dispatcher, the alcohol and drug program administrator will arrange to observe or talk with the driver. If he/she believes, after observing or talking to the driver, that the conduct or performance problem could be due to substance abuse, the driver will be immediately informed that continued refusal will result in disqualification from performing any safety-sensitive function.
- Employees will be asked to release any evidence relating to the observation for further testing. Failure to comply may subject the employee to subsequent discipline or suspension from driving duties. All confiscated evidence will be receipted for with signatures of both the receiving supervisor, as well as the provider.
- If upon confrontation by the supervisor or dispatcher, the driver admits to use but requests assistance, the alcohol and drug program administrator will arrange for assessment by an appropriate substance abuse professional (SAP). Reassignment to the driver position is conditional to completing the SAP's guidelines and return-to-work testing.

c. The supervisor or dispatcher shall, within 24 hours or before the results of the controlled substance test are released, document the particular facts related to the behavior or performance problems, and present such documentation to the alcohol and drug program administrator.

d. The drug and alcohol program administrator will remove or cause the removal of the driver from the Company-owned vehicle and ensure that the driver is transported to an appropriate collection site and thereafter to the driver's residence or, where appropriate, to a place of lodging. Under no circumstances will that driver be allowed to continue to drive a Company vehicle or his/her own vehicle until a confirmed negative test result is received.

e. If, during the course of employment, the driver acknowledges a substance abuse problem and requests assistance, the problem may be treated as if it were an illness, subject to the provisions set forth below:

- The decision to seek diagnosis and accept treatment for the substance abuse problem is the responsibility of the driver.
- The diagnosis and prescribed treatment of the driver's condition will be determined by health care professionals designated by the alcohol and drug program administrator in conjunction with the driver's physician.
- The driver might be placed on medical leave for a predetermined period recommended by those medical professionals if the SAP determines that such action is appropriate.

2. Post-Accident Testing: Currently, federal regulations place the burden of compliance with post-accident alcohol and drug testing regulations on the driver. Therefore, all drivers are required to provide a breath test and a urine specimen to be tested for the use of controlled substances "as soon as practicable" after an accident. The driver shall remain readily available for such testing or may be deemed by the alcohol and drug program administrator to have refused to submit to testing. No alcohol may be consumed for 8 hours after the accident or until a test is conducted. If the driver is seriously injured and cannot provide a specimen at the time of the accident, he/she shall provide the necessary authorization for obtaining hospital reports and other documents that would indicate whether there were any controlled substances in his/her system.

An accident is defined by FMCSA regulations as an accident that results in the death of a human being or bodily injury to a person who, as a result of the injury, immediately receives medical treatment away from the scene of the accident; or which has had one of the vehicles towed from the scene of the accident. Except for a fatality accident, verification of the driver's responsibility in the above accident must be established by a citation to the driver.

Adherence by drivers to post-accident specimen collection requirements is a condition of continued employment. The failure of an driver to comply with DOT post-accident and specimen collection rules will be considered a breach of his/her agreement with the Company and will be subject to termination.

3. Random Testing: The Company will conduct random testing for all covered drivers as follows:

   a. A company-wide selection process that removes discretion in selection from any supervisory personnel will be adopted by the Company. This process will select covered drivers through the use of a computerized program.

   b. The random testing shall provide for 10% alcohol testing and 50% drug testing of all covered drivers.

   c. The random testing will be reasonably spaced over any 12-month period.

   d. Once notified, a driver must proceed immediately to the assigned collection site.

4. The alcohol and drug program administrator will be responsible for designating the appropriate substance abuse professional who, in conjunction with the driver's physician, will diagnose the problem and recommend treatment.

   a. The driver's successful completion of the approved treatment program is a condition of continued employment as a driver.

   b. Following successful completion of any approved treatment program, the driver will be required to submit to at least six random drug tests during the first year, and follow-up testing may be conducted for up to 60 months. Failure to adhere to this condition is grounds for immediate termination.

   c. All supervisors or dispatchers will receive training to assist them in identifying alcohol and drug use behavioral characteristics.

5. Return-to-Duty Testing: Before a driver returns to duty requiring the performance of a safety-sensitive function after engaging in conduct prohibited by this policy and Part 382, Subpart B (FMCSR), the driver shall undergo a return to duty alcohol test with a result of less than a 0.02 BAC or receive a confirmed negative result from a controlled substance urinalysis test.

VI. COLLECTION OF BREATH AND URINE SPECIMENS AND LABORATORY ANALYSIS

A. Breath alcohol testing will be conducted either on site or at a prearranged location by a qualified Breath Alcohol Technician according to 49 CFR, Part 40 procedures. Refusal to Complete and sign the testing form or refusal to provide breath will be considered a positive test, and the driver will be removed from a safety-sensitive function until resolved.

B. Specimen Collection: Specimen collection will be conducted in accordance with applicable state and federal law. The collection procedures will be designed to ensure the security and integrity of the specimen provided by each driver, and those procedures will strictly follow federal chain-of-custody guidelines. Moreover, every reasonable effort will be made to maintain the dignity of each driver submitting a specimen for analysis in accordance with these procedures.

C. Laboratory Analysis: As required by FMCSA regulations, only a laboratory certified by Department of Health and Human Services (DHHS) to perform urinalysis for the detection of the presence of controlled substances will be retained by _____. The laboratory will be required to maintain strict compliance with federally approved chain-of-custody procedures, quality control, maintenance and scientific analytical methodologies.

VII. CONSEQUENCES: APPEAL OF TEST RESULTS

A. Alcohol and drug abuse may not only threaten the safety and productivity of all employees at _____, but causes serious individual health consequences to those who use them. Attachment #1 outlines several personal consequences that may result after abuse of controlled substances. Any confirmed actions prohibited by Part IV above, while performing a safety-sensitive function or refusing to take a breath test, will be grounds for disqualification as a driver.

B. A driver testing positive for alcohol or drug use is subject to disqualification. Refusal to submit to testing will also be considered a positive.

Refusal may be defined as not providing a breath sample or urine as directed, neglecting to sign appropriate control forms, using alcohol within 8 hours of an accident, or engaging in conduct that clearly obstructs the testing process.

Any driver testing positive for the presence of a controlled substance will be contacted by the Company's MRO. The driver will be allowed to explain and present medical documentation to explain any permissible use of a drug. All such discussions between the driver and the MRO will be confidential. _____ will not be a party to, or have access to, matters discussed between the driver and the MRO. If medically supportable reasons exist to explain the positive result, the MRO will report the test result to the Company as a negative.

Within 72 hours after the driver has been notified of a positive test result for drugs, he/she may request a retest of the split sample. This signed request will be provided to the MRO in writing, who will then initiate the new laboratory analysis. If a different result is detected by the subsequent laboratory, the test will be voided by the MRO, and _____ alcohol and drug program administrator will be notified. A retest may be initiated as appropriate.

VII. CONFIDENTIALITY

Under no circumstances, unless required or authorized by law, will alcohol or drug testing information or results for any employee or applicant be released without written request from the applicable employee.

Drivers are entitled, upon written request, to obtain copies of any records pertaining to the driver's use of alcohol or controlled substances, including any records pertaining to his or her alcohol or controlled substance test.

Collection of breath and urine samples must always be documented and sealed with a tamper-proof sealing system in the presence of the driver, to ensure that all tests can be correctly traced to the driver.

Drug test analysis from the DHHS approved laboratory will be forwarded directly to the Medical Review Officer assigned by the alcohol and drug program administrator.

Alcohol test results will be forwarded by the MRO to the alcohol and drug program administrator for confidential record keeping.

APPENDIX A

ALCOHOL AND DRUG EFFECTS

Section 382.601(b)(11) FMCSR mandates that all employees be provided with training material discussing the effects of alcohol and controlled substance use on an individual's health, work, and personal life.

This attachment is intended to help individuals understand the personal consequences of substance abuse.

ALCOHOL

Although used routinely as a beverage for enjoyment, alcohol can also have negative physical and mood-altering effects when abused. These physical or mental alterations in a driver may have serious personal and public safety risks.

Health Effects

An average of three or more servings per day of beer (12 ounces), whiskey (1 ounce), or wine (6 ounces) over time, may result in the following health hazards:

- Dependency
- Fatal liver diseases
- Kidney failure
- Pancreatitis
- Ulcers
- Decreased sexual function
- Increased cancers of the mouth, pharynx, esophagus, rectum, breast, and malignant melanoma
- Spontaneous abortion and neonatal mortality
- Birth defects

Social Issues

- 2/3 of all homicides are committed by people who drink prior to the crime.
- 2 - 3% of the driving population are legally drunk at any one time. This rate doubles at night and on weekends.
- 2/3 of all Americans will be involved in an alcohol-related vehicle accident during their lifetime.
- The separation and divorce rate in families with alcohol dependency problems is 7 times the average.
- 40% of family court cases are alcohol-related.
- Alcoholics are 15 times more likely to commit suicide.
- More that 60% of burns, 40% of falls, 69% of boating accidents, and 76% of private aircraft accidents are alcohol-related.
- In 2012, 10,322 people were killed and approximately 345,000 were injured in highway accidents, which were alcohol related. This was 33% of all highway fatalities.
- 30,000 people will die each year from alcohol-caused liver disease.
- 10,000 people will die each year due to alcohol-related brain disease or suicide.
- Up to 125,000 people die each year due to alcohol-related conditions or accidents.

Workplace Issues

- It takes one hour for the average person (150 pounds) to process one serving of alcohol from the body.
- Impairment can be measured with as little as two drinks in the body.
- A person who is legally intoxicated is 6 times more likely to have an accident than a sober person.

ALCOHOL'S TRIP THROUGH THE BODY

Mouth and Esophagus: Alcohol is an irritant to the delicate linings of the throat and food pipe. It burns as it goes down.

Stomach and Intestines: Alcohol has an irritating effect on the stomach's protective lining, resulting in gastric or duodenal ulcers. This condition, if it becomes acute, can cause peritonitis, or perforation of the stomach wall. In the small intestine, alcohol blocks absorption of such substances as thiamine, folic acid, fat, vitamin B1, vitamin B12, and amino acids.

Bloodstream: 95% of the alcohol taken into the body is absorbed into the bloodstream through the lining of the stomach and duodenum. Once in the bloodstream, alcohol quickly goes to every cell and tissue in the body. Alcohol causes red blood cells to clump together in sticky wads, slowing circulation and depriving tissues of oxygen. It also causes anemia by reducing red blood cell production. Alcohol slows the ability of white cells to engulf and destroy bacteria and degenerates the clotting ability of blood platelets.

Pancreas: Alcohol irritates the cells of the pancreas, causing them to swell, thus blocking the flow of digestive enzymes. The chemicals, unable to enter the small intestine, begin to digest the pancreas, leading to acute hemorrhagic pancreatitis. One out of five patients who develop this disease die during the first attack. Pancreatitis can destroy the pancreas and cause a lack of insulin, thus resulting in diabetes.

Liver: Alcohol inflames the cells of the liver, causing them to swell and block the tiny canal to the small intestines. This prevents bile from being filtered properly through the liver. Jaundice develops, turning the whites of the eyes and skin yellow. Each drink of alcohol increases the number of live cells destroyed, eventually causing cirrhosis of the liver. This disease is eight times more frequent among alcoholics than among non-alcoholics.

Heart: Alcohol causes inflammation of the heart muscle. It has a toxic effect on the heart and causes increased amounts of fat to collect, thus disrupting its normal metabolism.

Urinary Bladder and Kidneys: Alcohol inflames the lining of the urinary bladder making it unable to stretch properly. In the kidneys, alcohol causes increased loss of fluids through its irritating effect.

Sex Gland: Swelling of the prostate gland caused by alcohol interferes with the ability of the male to perform sexually. It also interferes with the ability to climax during intercourse.

Brain: The most dramatic and noticed effect of alcohol is on the brain. It depresses brain centers, producing progressive dyscoordination: confusion, disorientation, stupor, anesthesia, coma, and death. Alcohol kills brain cells and brain damage is permanent. Drinking over a period of time causes loss of memory, judgment and learning ability.

DRUGS

Marijuana

Health Effects

- Emphysema-like conditions.
- One joint of marijuana contains cancer-causing substances equal to 1/2 pack of cigarettes.
- Marijuana is commonly contaminated with the fungus Aspergillus that can cause serious respiratory tract and sinus infections.
- Marijuana lowers the body's immune system response, making users more susceptible to infection.
- Chronic smoking causes changes in brain cells and brain waves. The brain does not work as efficiently or effectively. Long-term brain damage may occur.
- Tetrahydrocannabinol (THC) and 60 other chemicals in marijuana concentrate in the ovaries and testes.
- Chronic smoking of marijuana in males causes a decrease in testosterone and an increase in estrogen, the female hormone. As a result, the sperm count is reduced, leading to temporary sterility.

- Chronic smoking of marijuana in females causes a decrease in fertility.
- A higher than normal incidence of stillborn babies, early termination of pregnancy, and higher infant mortality rate during the first few days of life are common in pregnant marijuana smokers.
- THC causes birth defects including brain damage, spinal cord, forelimbs, liver and water on the brain and spine in test animals.
- Prenatal exposure may cause underweight newborn babies.
- Fetal exposure may decrease visual functioning.
- User's mental function can display the following effects:
  - delayed decision making
  - diminished concentration
  - impaired short-term memory
  - impaired signal detection
  - impaired tracking
  - erratic cognitive function
  - distortion of time estimation

Workplace Issues

- THC is stored in body fat and slowly released.
- Marijuana smoking has long-term effects on performance.
- Increased THC potency in modern marijuana dramatically compounds the side effects.
- Combining alcohol or other depressant drugs with marijuana increases the impairing effects of both.

Cocaine

Used medically as a local anesthetic. When abused, it becomes a powerful physical and mental stimulant. The entire nervous system is energized. Muscles tense, heart beats faster and stronger, and the body burns more energy. The brain experiences exhilaration caused by a large release of neurohormones associated with mood elevation.

Health Effects

- Regular use may upset the chemical balance of the brain. As a result, it may speed up the aging process by causing damage to critical nerve cells. Parkinson's disease could also occur.
- Cocaine causes the heart to beat faster, harder, and rapidly increases blood pressure. It also causes spasms of blood vessels in the brain and heart. Both lead to ruptured vessels causing strokes and heart attacks.
- Strong dependence can occur with one "hit" of cocaine. Usually mental dependency occurs within days for "crack" or within several months for snorting coke. Cocaine causes the strongest mental dependency of all the drugs.

- Treatment success rates are lower than with any other chemical dependency.
- Extremely dangerous when taken with other depressant drugs. Death due to overdose is rapid. Fatal effects are usually not reversible by medical intervention.

Workplace Issues

- Extreme mood and energy swings create instability. Sudden noise causes a violent reaction.
- Lapses in attention and ignoring warning signals increase probability of accidents.
- High cost frequently leads to theft and/or dealing.
- Paranoia and withdrawal may create unpredictable or violent behavior.
- Performance is characterized by forgetfulness, absenteeism, tardiness, and missing assignments.

Opiates

Narcotic drugs that alleviate pain and depress body functions and reactions.

Health Effects

- IV needle users have a high risk of contracting hepatitis or AIDS when sharing needle.
- Increased pain tolerance. As a result, a person may more severely injure themselves and fail to seek medical attention as needed.
- Narcotic effects are multiplied when combined with other depressants causing an increased risk for overdose.
- Because of tolerance, there is an ever increasing need for more.
- Strong mental and physical dependency occurs.
- With increased tolerance and dependency combined, there is a serious financial burden for the users.

Amphetamines

Central nervous system stimulant that speeds up the mind and body.

Health Effects

- Regular use causes strong psychological dependency and increased tolerance.
- High doses may cause toxic psychosis resembling schizophrenia.
- Intoxication may induce a heart attack or stroke due to increased blood pressure.
- Chronic use may cause heart or brain damage due to severe constriction of capillary blood vessels.
- Euphoric stimulation increases impulsive and risk taking behavior, including bizarre and violent acts.
- Withdrawal may result in severe physical and mental depression.

Workplace Issues

- Since the drug alleviates the sensation of fatigue, it may be abused to increase alertness during periods of overtime or failure to get rest.
- With heavy use or increasing fatigue, the short-term mental or physical enhancement reverses and becomes impairment.

Phencyclidine (PCP)

Often used as a large animal tranquilizer. Abused primarily for its mood altering effects. Low doses produce sedation and euphoric mood changes. Mood can rapidly change from sedation to excitation and a blank stare. Sudden noises or physical shocks may cause a "freak out" in which the person has abnormal strength, violent behavior, and an inability to speak or comprehend.

Health Effects

- The potential for accidents and overdose emergencies is high due to the extreme mental effects combined with the anesthetic effect on the body.
- PCP, when combined with other depressants, including alcohol, increases the possibility of an overdose.
- If misdiagnosed as LSD induced, and treated with Thorazine, can be fatal.
- Irreversible memory loss, personality changes, and thought disorders may result.

Workplace Issues

- Not common in workplace primarily because of the severe disorientation that occurs.
- There are four phases to PCP abuse.
- Acute toxicity causing combativeness, catatonia, convulsions, and coma.
- Distortions of size, shape, and distorted perception are common.
- Toxic psychosis with visual and auditory delusions, paranoia and agitation.
- Drug induced schizophrenia.
- Induced depression that may create suicidal tendencies and mental dysfunction.

APPENDIX B
DRIVER NOTIFICATION LETTER

I certify that I have received a copy of, and have read, the above __(Company)__ policy on alcohol and drug testing procedures.

I understand that as a condition of employment as a driver I must comply with these guidelines, and do agree that I will remain medically qualified by following these procedures.

If I develop a problem with alcohol or drug abuse during my employment with __(Company)__, I will seek assistance through the current alcohol and drug testing program administrator.

Signature_____

Date Signed_____

Employer: Retain in Employee's Confidential File

Alcohol and Controlled Substance Employee's Certified Receipt

Employee's Name Company/Department

This is to certify that I have been provided educational materials that explain the requirements of 382.601 and my employer's policies and procedures with respect to meeting the requirements. The materials include detailed discussion of the following checked (√) items:

_____ 1. The designated person to answer questions about the materials.
_____ 2. The categories of drivers subject to Part 382.
_____ 3. Sufficient information about the safety-sensitive functions and periods of the workday that compliance is required.
_____ 4. Specific information concerning prohibited driver conduct.
_____ 5. Circumstances under which a driver will be tested.
_____ 6. Test procedures, driver protection and integrity of the testing process, and safeguarding the validity of the test.
_____ 7. The requirement that tests are administered in accordance with Part 382.
_____ 8. An explanation of what will be considered a refusal to submit to a test and the consequences.
_____ 9. The consequences of Part 382 Subpart B violations including removal from safety-sensitive functions and 382.605 procedures.
_____ 10. The consequences for drivers found to have an alcohol concentration of 0.02 or greater but less than 0.04.
_____ 11. Information on the affect of alcohol and controlled substances use on:
- an individual's health
- signs and symptoms of a problem
- work
- personal life
- available methods of intervening when a problem is suspected

_____ 12. Optional information:

_____
Employee's Signature

_____
Date

_____
Authorized Employer Representative

_____
Date

Employer: Retain in Employee's Confidential File

ALCOHOL AND/OR CONTROLLED SUBSTANCE TEST NOTIFICATION

Part 382 - Controlled Substances and Alcohol Use Testing applies to drivers of this company.

382.113 Requirement for notice.
Before performing an alcohol or controlled substances test under this part, each employer shall notify a driver that the alcohol or controlled substances test is required by this part. No employer shall falsely represent that a test is administered under this part.

Company Name:_____
Driver/Applicant Name:_____
(Print) (First, M.I., Last) _____

You are hereby notified the following test will be administered in compliance with the Federal Motor Carrier Safety Regulations.

1. The test is Scheduled: Date: _____
   Location: _____
   Time: _____

2. Check type of test □ Alcohol □ Controlled Substance

3. Check reason for test: □ Pre-employment □ Random □ Reasonable suspicion/cause
   □ Post-accident □ Return to Duty □ Follow-up

4. Appointment instructions/comments:

_____

_____

I understand that as a condition of my employment with this company, the above test is required.

_____ _____
Driver/Applicant's Signature Date

Witnessed by :

_____ _____
Company Representative Date

Employer: Retain in Employee's Confidential File

U.S. DEPARTMENT OF TRANSPORTATION DRUG AND ALCOHOL TESTING MIS DATA COLLECTION FORM

Calendar Year Covered by this Report: _____

OMB No. 2105-0529
Form DOT F 1385 (Rev. 5/2008)

I. Employer:

Company Name:_____

Doing Business As (DBA) Name (if applicable):_____

Address:_____ E-mail: _____

Name of Certifying Official: _____ Signature: _____

Telephone: (_____)_____ Date Certified: _____

Prepared by (if different): _____ Telephone: (_____)_____

C/TPA Name and Telephone (if applicable): _____ (_____)_____

Check the DOT agency for which you are reporting MIS data; and complete the information on that same line as appropriate:

___ FMCSA – Motor Carrier: DOT #: _____ Owner-operator: (circle one) YES or NO Exempt (Circle One) YES or NO

___ FAA – Aviation: Certificate # (if applicable): _____ Plan / Registration # (if applicable):_____

___ PHMSA – Pipeline: (Check) Gas Gathering__ Gas Transmission__ Gas Distribution__ Transport Hazardous Liquids__ Transport Carbon Dioxide__

___ FRA – Railroad: Total Number of observed/documented Part 219 "Rule G" Observations for covered employees: _____

___ USCG – Maritime: Vessel ID # (USCG- or State-Issued): _____ (If more than one vessel, list separately.)

___ FTA – Transit

II. Covered Employees: (A) Enter Total Number Safety-Sensitive Employees In All Employee Categories: [ ]

(B) Enter Total Number of Employee Categories: [ ]

(C)

Employee Category	Total Number of Employees in this Category

If you have multiple employee categories, complete Sections I and II (A) & (B). Take that filled-in form and make one copy for each employee category and complete Sections II (C), III, and IV for each separate employee category.

III. Drug Testing Data:

	1	2	3	4	5	6	7	8	9	10	11	12	13
									Refusal Results				
Type of Test	Total Number Of Test Results [Should equal the sum of Columns 2, 3, 9, 10, 11, and 12]	Verified Negative Results	Verified Positive Results ~ For One Or More Drugs	Positive For Marijuana	Positive For Cocaine	Positive For PCP	Positive For Opiates	Positive For Amphetamines	Adulterated	Substituted	"Shy Bladder" ~ With No Medical Explanation	Other Refusals To Submit To Testing	Cancelled Results
Pre-Employment													
Random													
Post-Accident													
Reasonable Susp./Cause													
Return-to-Duty													
Follow-Up													
TOTAL													

IV. Alcohol Testing Data:

	1	2	3	4	5	6	7	8	9
							Refusal Results		
Type of Test	Total Number Of Screening Test Results [Should equal the sum of Columns 2, 3, 7, and 8]	Screening Tests With Results Below 0.02	Screening Tests With Results 0.02 Or Greater	Number Of Confirmation Tests Results	Confirmation Tests With Results 0.02 Through 0.039	Confirmation Tests With Results 0.04 Or Greater	"Shy Lung" ~ With No Medical Explanation	Other Refusals To Submit To Testing	Cancelled Results
Pre-Employment									
Random									
Post-Accident									
Reasonable Susp./Cause									
Return-to-Duty									
Follow-Up									
TOTAL									

Employer: Retain in Employee's Confidential File

OBSERVED BEHAVIOR REASONABLE SUSPICION RECORD

PERSONNEL OFFICE USE ONLY

Employee Number_____

Location_____

Incident Number_____

DRIVER'S NAME	DATE OBSERVED
ADDRESS OF INCIDENT: Street City State Zip Code	TIME OBSERVED FROM_____a.m. p.m. TO_____a.m. p.m.

Reasonable suspicion determined for: ☐ Alcohol ☐ Controlled Substances

Mark items that apply and describe specifics

1. APPEARANCE: normal_____ sleepy_____ tremors_____ clothing _____ cleanliness_____

   Description:_____

   _____

2. BEHAVIOR:_____

   normal_____ erratic_____ irritable_____ inappropriate gaiety_____ mood swings_____ lethargic_____

   Description:_____

   _____

   _____

3. SPEECH: _____

   _____

   Description: _____

   _____

4. BODY ODORS:_____

5. INDICATIONS OF THE CHRONIC AND WITHDRAWAL EFFECTS OF CONTROLLED SUBSTANCES:

   ☐ YES ☐ NO

   EXPLAIN: _____

   _____

6. OTHER OBSERVATIONS FOR REASONABLE SUSPICION:

   _____

   _____

WITNESSED BY:

Signature	Title	Preparation Date	Time
			a.m. p.m.
			a.m. p.m.

THE ALCOHOL TEST MUST BE ADMINISTERED WITHIN EIGHT HOURS FOLLOWING A REASONABLE SUSPICION DETERMINATION

EMPLOYER: RETAIN IN EMPLOYEE'S CONFIDENTIAL FILE *(Form 31 - Rev. 6-2000)*

WASHINGTON STATE DEPARTMENT OF LICENSING

Positive/Refused Drug/Alcohol Test Report

Medical review officers and breath alcohol technicians can use this form to report positive or refused drug and alcohol tests. Send the completed form to: **Suspensions, Department of Licensing, PO Box 9030, Olympia, WA 98507-9030** or fax to (360) 570-7826.

Driver name *(Last, First, Middle Initial)*		
Driver license number	Date of birth	Social Security number
Employer/Motor carrier/Consortium name		
Employer/Motor carrier/Consortium mailing address *(Address, City, State, ZIP code)*		Email address
Reason for selection ☐ Pre-employment ☐ Random ☐ Reasonable suspicion ☐ Post accident ☐ Return to duty ☐ Follow-up		

Positive/Refused test

The driver above

☐ Tested positive for: ☐ drug(s) ☐ alcohol (0.04 or above)

☐ Refused test on _____ by: ☐ adulteration ☐ substitution of a sample
Date *(mm/dd/yyyy)* ☐ other _____

Medical Review Officer

Specimen ID number	Date of test	Laboratory name
Drug(s) found	Adulterant(s) found	Split sample tested? ☐ Yes ☐ No

Breath Alcohol Technician

Test number	Date of test	Time of test
Instrument name	Instrument serial number	

Medical Review Officer/Breath Alcohol Technician

Name of Medical Review Officer/Breath Alcohol Technician	Title	(Area code) Telephone number
Address *(Address, City, State, ZIP code)*	Email address	

Answer the following

On the date of this test, did the motor carrier, employer, or consortium listed above have a program subject to federal requirements under 49 CFR Part 40? . . . . . ☐ Yes ☐ No

Did you accurately follow the protocols for testing in accordance with 49 CFR Part 40 in verifying or confirming the results of this test? . . . . . ☐ Yes ☐ No

I certify under penalty of perjury under the laws of the state of Washington that on the date of this test the foregoing and any attachments and information contained herein is true and correct.

PRINT name Title

X MRO/BAT: When completed, print this out and sign here. Stamped signatures not accepted.

Date and place signed

Medical Review Officer/Breath Alcohol Technician handwritten signature
(stamped signatures are not accepted)

DR-500-013 (R/3/11)WA

We are committed to providing equal access to our services.
If you need accommodation, please call (360) 902-3900 or TTY (360) 664-0116.

6DPT DOC

Employer: Retain in Employee's Confidential File

WASHINGTON STATE DEPARTMENT OF LICENSING

Positive/Refused Drug/Alcohol Test Report by Employer

Employers use this form to report a positive or refused drug or alcohol test by a driver. **A positive test result must include a copy of our Positive/Refused Drug/Alcohol Test Report (DR-500-013) completed by the Medical Review Officer/Breath Alcohol Technician.** When completed, mail or fax this form and any required attachments to:

Suspensions
Department of Licensing
PO Box 9030
Olympia, WA 98507-9030

Fax: (360) 570-7826

Driver name *(Last, First, Middle Initial)*			
Driver license number	Date of birth	Last 4 digits of Social Security number Used for identification purposes. 42 USC 405(c)(2)(C). XXX-XX-	
Employer/Motor carrier/Consortium name			
Employer/Motor carrier/Consortium mailing address	City	State	ZIP Code
(Area code) Employer telephone number	Employer email address		

Reason for selection
☐ Pre-employment ☐ Random ☐ Reasonable suspicion ☐ Post accident ☐ Return to duty ☐ Follow-up

Test results
The driver above has:
☐ Tested positive for drugs/alcohol on _____ (**attach report DR-500-013**)
Date *(mm/dd/yyyy)*

☐ Refused test on _____ by: ☐ Failed to appear for testing
Date *(mm/dd/yyyy)*
☐ Based on Positive/Refused Drug/Alcohol Test Report (**attach report DR-500-013**)
☐ Other:

As the employer, motor carrier, or consortium, having a program subject to federal requirements under 49 CFR 40 or 655, I declare under penalty of perjury under the laws of the state of Washington that on the date of this test the foregoing and any attachments and information contained therein is true and correct.

Date and place

PRINT or TYPE name Title

X When you have completed this form, please print it out and sign here.

Signature of employer, motor carrier, or consortium

RCW 46.25.123

DR-500-005 (R/12/13)WA

We are committed to providing equal access to our services.
If you need accommodation, please call (360) 902-3900 or TTY (360) 664-0116.

6DPT DOC

Employer: Retain in Employee's Confidential File

FEDERAL DRUG TESTING CUSTODY AND CONTROL FORM

SPECIMEN ID NO. 0000001

STEP 1: COMPLETED BY COLLECTOR OR EMPLOYER REPRESENTATIVE ACCESSION NO.

A. Employer Name, Address, I.D. No.

B. MRO Name, Address, Phone No. and Fax No.

C. Donor SSN or Employee I.D. No. _____

D. Specify Testing Authority: ☐ HHS ☐ NRC ☐ DOT – Specify DOT Agency: ☐ FMCSA ☐ FAA ☐ FRA ☐ FTA ☐ PHMSA ☐ USCG

E. Reason for Test: ☐ Pre-employment ☐ Random ☐ Reasonable Suspicion/Cause ☐ Post Accident ☐ Return to Duty ☐ Follow-up ☐ Other (specify) _____

F. Drug Tests to be Performed: ☐ THC, COC, PCP, OPI, AMP ☐ THC & COC Only ☐ Other (specify) _____

G. Collection Site Address:

Collector Phone No. _____

Collector Fax No. _____

OMB No. 0930-0158

STEP 2: COMPLETED BY COLLECTOR (make remarks when appropriate) Collector reads specimen temperature within 4 minutes.

Temperature between 90° and 100° F? ☐ Yes ☐ No, Enter Remark | Collection: ☐ Split ☐ Single ☐ None Provided, Enter Remark | ☐ Observed, Enter Remark

REMARKS

STEP 3: Collector affixes bottle seal(s) to bottle(s). Collector dates seal(s). Donor initials seal(s). Donor completes STEP 5 on Copy 2 (MRO Copy)

STEP 4: CHAIN OF CUSTODY - INITIATED BY COLLECTOR AND COMPLETED BY TEST FACILITY

I certify that the specimen given to me by the donor identified in the certification section on Copy 2 of this form was collected, labeled, sealed and released to the Delivery Service noted in accordance with applicable Federal requirements.

X _____ Signature of Collector

(PRINT) Collector's Name (First, MI, Last) | Date (Mo/Day/Yr) ___/___/___ | Time of Collection AM PM

SPECIMEN BOTTLE(S) RELEASED TO:

Name of Delivery Service

RECEIVED AT LAB OR IITF:

X _____ Signature of Accessioner

(PRINT) Accessioner's Name (First, MI, Last) | Date (Mo/Day/Yr) ___/___/___

Primary Specimen Bottle Seal Intact ☐ YES ☐ NO

If NO, Enter remark in Step 5A.

SPECIMEN BOTTLE(S) RELEASED TO:

STEP 5A: PRIMARY SPECIMEN REPORT - COMPLETED BY TEST FACILITY

☐ **NEGATIVE** ☐ DILUTE ☐ **POSITIVE** for: ☐ Marijuana Metabolite (Δ9-THCA) ☐ Cocaine Metabolite (BZE) ☐ PCP ☐ 6-Acetylmorphine ☐ Morphine ☐ Codeine ☐ Methamphetamine ☐ Amphetamine ☐ MDMA ☐ MDA ☐ MDEA

☐ **REJECTED FOR TESTING** ☐ **ADULTERATED** ☐ **SUBSTITUTED** ☐ **INVALID RESULT**

REMARKS: _____

Test Facility (if different from above) : _____

I certify that the specimen identified on this form was examined upon receipt, handled using chain of custody procedures, analyzed, and reported in accordance with applicable Federal requirements.

X _____ Signature of Certifying Technician/Scientist | (PRINT) Certifying Technician/Scientist's Name (First, MI, Last) | Date (Mo/Day/Yr) ___/___/___

STEP 5b: COMPLETED BY SPLIT TESTING LABORATORY

Laboratory Name

Laboratory Address

☐ **RECONFIRMED** ☐ **FAILED TO RECONFIRM** - REASON _____

I certify that the split specimen identified on this form was examined upon receipt, handled using chain of custody procedures, analyzed, and reported in accordance with applicable Federal requirements.

X _____ Signature of Certifying Scientist | (PRINT) Certifying Scientist's Name (First, MI, Last) | Date (Mo./Day/Yr.) ___/___/___

PRESS HARD - YOU ARE MAKING MULTIPLE COPIES

Version C 14May2010

80308

0000001 SPECIMEN ID NO. A | PLACE OVER CAP | 0000001 SPECIMEN BOTTLE SEAL | Date (Mo/Day/Yr) ___/___/___ Donor's Initials

0000001 SPECIMEN ID NO. B (SPLIT) | PLACE OVER CAP | 0000001 SPECIMEN BOTTLE SEAL | Date (Mo/Day/Yr) ___/___/___ Donor's Initials

COPY 1 - TEST FACILITY COPY

U.S. Department of Transportation (DOT) Alcohol Testing Form

(The instructions for completing this form are on the back of Copy 3)

Step 1: TO BE COMPLETED BY ALCOHOL TECHNICIAN

A: Employee Name _____
(Print) (First, M.I., Last)

B: SSN or Employee ID No. _____

C: Employer Name _____
Street _____
City, State, Zip _____

_____

DER Name and Telephone No. _____(____)_____
DER Name **DER Phone Number**

D: Reason for Test: ☐ **Random** ☐ **Reasonable Susp** ☐ **Post-Accident** ☐ **Return to Duty** ☐ **Follow-up** ☐ **Pre-employment**

STEP 2: TO BE COMPLETED BY EMPLOYEE

I certify that I am about to submit to alcohol testing required by US Department of Transportation regulations and that the identifying information provided on the form is true and correct.

_____ _____/____/_____
Signature of Employee **Date Month Day Year**

STEP 3: TO BE COMPLETED BY ALCOHOL TECHNICIAN

(If the technician conducting the screening test is not the same technician who will be conducting the confirmation test, each technician must complete their own form.) I certify that I have conducted alcohol testing on the above named individual in accordance with the procedures established in the US Department of Transportation regulation, 49 CFR Part 40, that I am qualified to operate the testing device(s) identified, and that the results are as recorded.

TECHNICIAN: ☐ **BAT** ☐ **STT** **DEVICE:** ☐ **SALIVA** ☐ **BREATH*** **15-Minute Wait:** ☐ **Yes** ☐ **No**

SCREENING TEST: *(For BREATH DEVICE* write in the space below only if the testing device is not designed to print.)*

Test #	Testing Device Name	Device Serial # OR Lot # & Exp Date	Activation Time	Reading Time	Result

CONFIRMATION TEST: *Results MUST be affixed to each copy of this form or printed directly onto the form.*

REMARKS:
_____
_____
_____

_____ _____
Alcohol Technician's Company **Company Street Address**

_____ _____(____)_____
(PRINT) Alcohol Technician's Name (First, M.I., Last) **Company City, State, Zip** **Phone Number**

_____ _____/____/_____
Signature of Alcohol Technician **Date Month Day Year**

STEP 4: TO BE COMPLETED BY EMPLOYEE IF TEST RESULT IS 0.02 OR HIGHER

I certify that I have submitted to the alcohol test, the results of which are accurately recorded on this form. I understand that I must not drive, perform safety-sensitive duties, or operate heavy equipment because the results are 0.02 or greater.

_____ _____/____/____
Signature of Employee **Date Month Day Year**

Form DOT F 1380 (Rev. 5/2008) **OMB No. 2105-0529**

COPY 1 – ORIGINAL – FORWARD TO THE EMPLOYER

Print Screening Results Here or Affix with Tamper Evident Tape

Print Confirmation Results Here or Affix with Tamper Evident Tape

Print Additional Results Here or Affix With Tamper Evident Tape

Rev. August 2011

Federal Drug Testing Custody and Control Form (CCF) and/or U.S. Department of Transportation Alcohol Testing Form (ATF) Suppliers

******The following list is being provided as potential sources for purchasing the Federal Drug Testing Custody and Control Form and/or U.S. Department of Transportation Alcohol Testing Form. The Department of Transportation is providing this information as a courtesy and does not consider this an endorsement of any company. Therefore, you may wish to consider other available sources.

Alpha Pro Solutions, Inc. ~ ATF only
735 Arlington Ave North, Ste. 104
St. Petersburg, FL 33701
Phone: 800-277-1997
Fax: 775-871-8538
www.alphaprosolutions.com

Atlantic Business Forms Inc. ~ CCF only
1520 Ednam Forrest Drive
Richmond, VA 23233
Phone: 804-741-0537
Fax: 804-741-0538

CMI, Inc. ~ ATF only
316 East Ninth Street
Owensboro, KY 42303
Phone: 866-835-0690
Fax: 270-685-6268
Contact: Customer Service
www.alcoholtest.com

Draeger Safety Diagnostics, Inc. ~ ATF only
4040 W. Royal Ln, Ste 136
Irving, TX 75063
Phone: 866-385-5900
Fax: 972-929-1260
info@dsdi.biz

Intoximeters, Inc. ~ ATF only
8110 Lackland Road
St. Louis, MO 63114
Phone: 800-451-8639
Fax: 314-429-4170
Contact: Customer Service
www.intox.com

J. J. Keller & Associates, Inc. ~ CCF & ATF
3003 Breezewood Lane
Neenah, WI 54957
Phone: 800-327-6868
Fax: 800-727-7516
www.jjkeller.com

Khantact USA, Inc. ~ ATF only
37 N. Hillside Ave.
Hillside, IL 60162
Phone: 800-742-4909
Fax: 708-449-7832
www.kahntactusa.com

LAB Documents ~ CCF & ATF
1911 Vernon
North Kansas City, MO 64116
Phone: 816-584-9033
Fax: 816-584-9034
Contact: mmaddox@mindspring.com

Lifeloc Technologies, Inc. ~ ATF only
12441 W. 49th Ave., Ste. 4
Wheat Ridge, CO 80033
Phone: 800-722-4872
Fax: 303-431-1423
info@lifeloc.com

Section 2

Commercial Driver's License Standards, Requirements, And Penalties

(49 CFR, Part 383)

PURPOSE of 49 CFR, Part 383: to help reduce or prevent commercial vehicle accidents, fatalities,
and injuries by:

- Requiring that no driver has more than one driver's license.
- Disqualifying drivers who have committed certain serious traffic violations, or other specified offenses.
- Strengthening licensing and testing standards.

Commercial Driver's License Information System (CDLIS): The CDLIS enables the States to exchange information about the driving records and driver's licenses of commercial vehicle drivers. This helps assure that only one license is issued to a driver and that disqualified drivers are prevented from obtaining a CDL. Employers may obtain an abstract of driving records from the Washington State Department of Licensing.

A COMMERCIAL DRIVER'S LICENSE (CDL) IS REQUIRED TO OPERATE ANY OF THE FOLLOWING VEHICLES:

CDL CLASS A: Combination vehicles where the Gross Combined Vehicle Weight Rating (GCVWR) is 26,001 or more pounds and the Gross Vehicle Weight Rating (GVWR) of the vehicle(s) being towed is over 10,000 pounds.

CDL CLASS B: Single vehicles where the GVWR is 26,001 or more pounds. May also tow trailers with a GVWR of 10,000 or less pounds.

CDL CLASS C: Any vehicle with a GVWR less than 26,001 pounds if:

- Designed to carry 16 or more persons, including the driver.
- Vehicles transporting hazardous materials in amounts requiring the vehicle to be placarded.

ENDORSEMENTS/RESTRICTIONS:

ENDORSEMENT H:	Placarded hazardous materials
ENDORSEMENT N:	Tank vehicles (Liquids/Gases)
ENDORSEMENT S:	School Bus Endorsement
ENDORSEMENT T:	Double or triple trailer combination unit.
ENDORSEMENT X:	Both tank vehicles and placarded hazardous materials
RESTRICTION K:	Non-air brake commercial vehicles only
RESTRICTION P1:	Vehicles 26,001 or more designed to carry 16 or more passengers, including the driver.
RESTRICTION P2:	Vehicles 26,000 pounds or less, designed to carry 16 or more passengers, including the driver.
RESTRICTION U:	Declared intrastate only CDL driver.

***Air Brake Restrictions**: If an applicant fails the air brake section of the knowledge test, or performs the skills test in a vehicle not equipped with air brakes, the applicant's CDL, if issued, will indicate the license holder may not operate any commercial vehicle equipped with air brakes.

DRIVERS EXEMPT FROM HAVING TO OBTAIN A CDL.

1. Farmers transporting farm equipment, supplies or products to or from a farm -- in a farm vehicle -- are exempt provided:
    - The vehicle is not used in the operation of for-hire motor carriage.
    - The vehicle is used within 150 miles of the farm.
2. Fire fighters and law enforcement officers operating emergency equipment are exempt provided:
    - They have completed the Emergency Vehicle Accident Prevention Program (EVAP).
    - They carry a card certifying completion.
3. Recreation Vehicle Operators are exempt when driving RV's for non-commercial purposes. This includes horse trailers and 2-axle rental trucks for non-commercial use.
4. Active duty military personnel who operate commercial motor vehicles for military purposes.

49 CFR, Part 383 contains the following provisions:

- A commercial driver cannot have more than one driver's license.
- A commercial driver seeking an endorsement must pass a written test and a skill test to qualify for a commercial driver's license.
- A commercial driver seeking endorsements for hazardous materials will be required to have a background check under provisions of the USA PATRIOT ACT of 2001. A driver with a current hazardous materials endorsement will be required to have a background check before renewal of the license endorsement.
- A driver must notify his/her employer of all traffic convictions committed while operating a commercial vehicle. Notification must be in writing within 30 days of the conviction.
- A driver must notify his/her employer of suspended, canceled, revoked licenses, or disqualification from driving a commercial motor vehicle (CMV) by the end of the business day following the day the employee received notice.
- A driver must give 10 years previous employment information when applying for employment as an operator of a commercial motor vehicle.
- An employer may not allow a person to operate a commercial motor vehicle if:
    - › Driver's license is suspended, revoked or canceled.
    - › Driver is disqualified from driving.
    - › Driver has more than one driver's license.

***Beginning January 30, 2012, CDL drivers, who certify their type of driving as interstate, must file a current medical examiner's certificate with DOL. A current medical examiner's certificate must be on file with DOL at all times in order for their CDL's to remain valid.**

Note: See chart on the following page to determine if you need a CDL.

DO YOU NEED A COMMERCIAL DRIVER'S LICENSE?

There are three types of Commercial Driver's Licenses, Class "A," Class "B," and Class "C." To see if you need a Commercial Driver's License, answer the questions and follow the arrows:

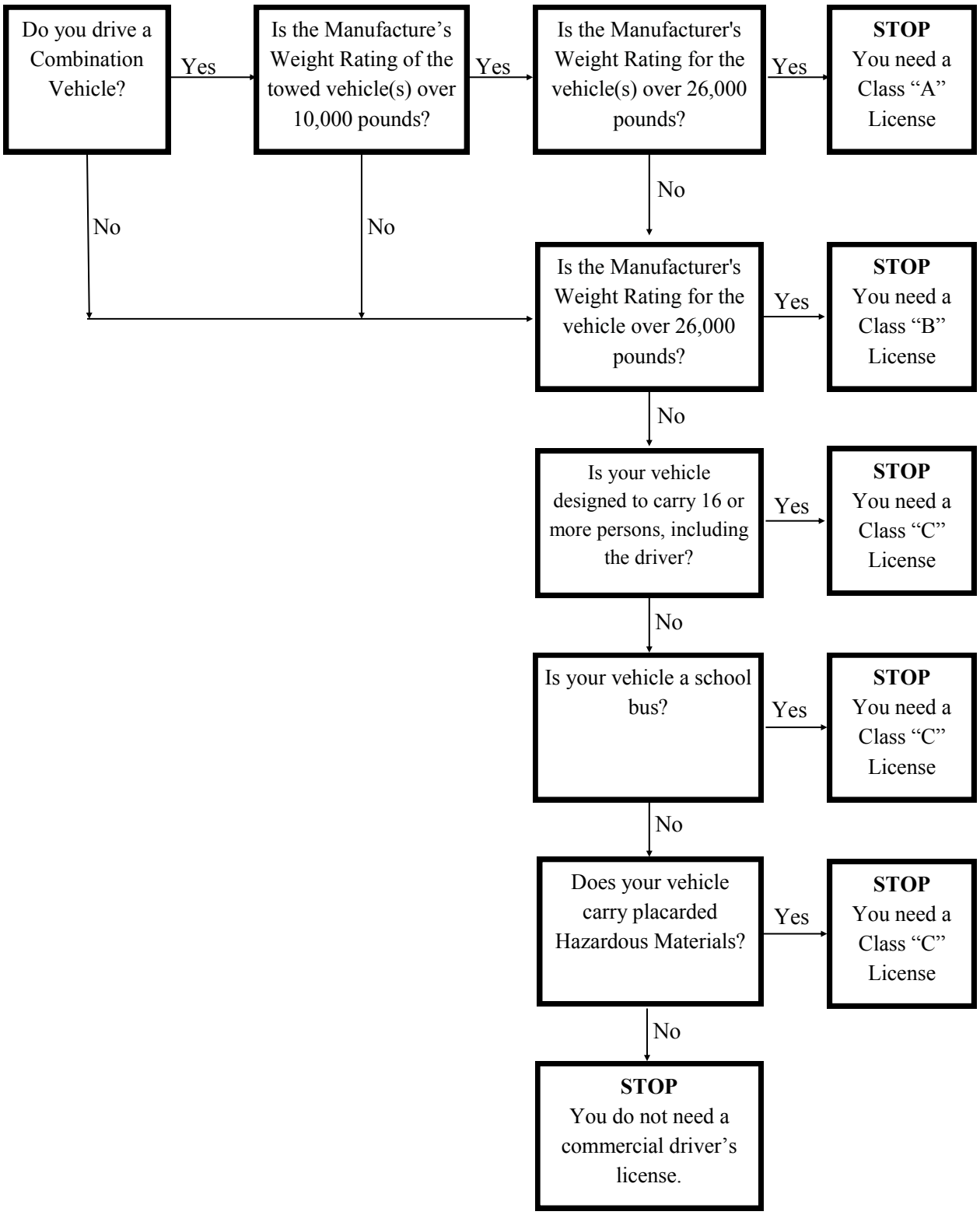

DRIVERS CAN BE DISQUALIFIED OR LOSE HIS/HER COMMERCIAL DRIVER'S LICENSES FOR CERTAIN CONVICTIONS.

60-day and 120-day disqualifications:

If convicted on a railroad highway grade crossing violation, 60 days for first violation, 120 days for second violation within any three-year period.

If convicted on two serious traffic violations within 3 years, a driver may lose his/her license for 60 days. A third conviction within 3 years results in a 120-day disqualification.

Serious violations include the following:

1. Excessive speed (15 MPH or more over posted speed limit).
2. Reckless driving (RCW 46.61.500).
3. Negligent driving (RCW 46.61.525).
4. Following too close (RCW 46.61.45).
5. Improper/erratic lane changes.
    - Overtaking on the right (RCW 46.61.115).
    - Limitations on overtaking on the left (RCW 46.61.120).
    - Limitations on driving to the left of the center of the roadway (RCW 46.61.125).

180 days to two year's disqualifications:

A driver is disqualified for at least 180 days, up to two years, for the following convictions:

- Violation of an out-of-service order while transporting hazardous materials requiring placards.
- Violation of an out-of-service order while operating a bus designed to carry 16 or more passengers.

One year disqualifications:

A driver is disqualified for not less than one year for a first-time conviction on the following offenses:

- Driving under the influence of alcohol or any drugs;
- Driving with an alcohol concentration of .04 or more;
- Leaving the scene of an accident;
- Using a commercial vehicle in the commission of a felony;
- Refusing to take a blood-alcohol test; or
- A third conviction on railroad grade crossing violation within three year

<u>NOTE: This publication not intended for sale.</u>

Three year disqualifications:

A driver is disqualified for at least three years:

- If convicted of any of the above-listed one-year offenses while transporting hazardous materials;
- A second conviction in a period of 10 years on a violation of an out-of-service order involving transportation of placarded hazardous materials or a bus designed for 16 or more passengers.

Lifetime disqualifications:

A person may be disqualified from driving a commercial motor vehicle for life for the following:

- A second conviction for any of the above-listed offenses. (The second conviction may be for the same or a different offense.)
- For using a commercial motor vehicle in the commission of a felony involving the manufacture, distribution, or dispensing of a controlled substance, or possession with intent to manufacture, distribute, or dispense a controlled substance.
- Three or more disqualifications within 5 years for confirmed positive drug or alcohol test under 49 CFR Part 382 and 49 CFR Part 40.

Notification to employer and licensing State required: Upon conviction for any State or local traffic violation, drivers must notify the Department of Licensing (except for parking infractions) and must notify their employer(s) within 30 days. This notification must include the following information:

- Driver's full name.
- Driver's license number.
- Date of conviction.
- Details about the offense, including any resulting suspension, revocation, or cancellation of driving privileges.
- Indication of whether the violation happened in a commercial motor vehicle.
- Location of offense.
- Driver's signature.

Notification to employer of driver's license suspensions: Drivers must provide their employer(s) notice by the end of the business day following the day the driver is informed of suspension, inactivation, revocation, cancellation, disqualification, or loss of the right to operate a commercial motor vehicle for any period of time.

For further guidance concerning Washington State Commercial Driver Licenses, contact:
Driver Examining
Department of Licensing
P O Box 9030
Olympia, WA 98504-9030
Telephone: (360) 902-3859

Section 3

Qualifications Of Drivers

(49 CFR, Part 391)

Drivers must be qualified to operate commercial vehicles. Part 391 explains what a carrier must do to qualify drivers.

Generally, a commercial motor vehicle driver must meet the following requirements:

- Be in good health.
- Be at least 18 years of age (if operating exclusively in Washington intrastate commerce). Drivers operating in interstate commerce must be at least 21 years of age.
- Speak and read English well enough to converse with the general public, understand highway traffic signs and signals, do his/her job, respond to official questions, and make legible entries on reports and records.
- Be able to drive the vehicle safely.
- Be able to determine whether the vehicle is safely loaded.
- Know how to block, brace, and tie down cargo.
- Have only one valid commercial driver's license.
- Not be disqualified to drive a commercial motor vehicle.
- Provide an employing motor carrier with a list of all motor vehicle violations or a signed statement that the driver has not been convicted of any motor vehicle violations during the past 12 months. A disqualified driver must not be allowed to drive a commercial motor vehicle for any reason.
- Pass a driver's road test.
- Test negatively for controlled substances.
- Complete an application for employment.

PHYSICAL QUALIFICATIONS AND EXAMINATIONS

All drivers of commercial vehicles must pass a physical examination. If the driver passes the physical, the doctor will give the driver a medical examiner's certificate that must be carried at all times when driving a commercial vehicle. The certificate must be renewed every 2 years, or sooner if instructed by the medical examiner.

MEDICAL CERTIFICATE REQUIREMENTS CFR PART 391.41

A person subject to this part must not operate a commercial motor vehicle unless he or she is medically certified as physically qualified to do so, and, when on-duty has on his or her person the original, or a copy, of a current medical examiner's certificate that he or she is physically qualified to drive a commercial motor vehicle. Beginning May 21, 2014, drivers are required to obtain their FMCSA medical exanimation from a **certified medical examiner that is listed on the National Registry**. If a driver has been examined on or after May 21, 2014 by an examiner that is not on the National Registry the driver must be reexamined.

To find a list of certified medical examiners in your area, go to the National Registry website at https://nationalregistry.fmcsa.dot.gov.

Enter the City, State or ZIP Code to find an examiner. You can also use the Advanced Search option to look up a medical examiner by specific search criteria.

CDL exception. (i) Beginning January 30, 2015, a driver required to have a commercial driver's license under part 383 of this chapter, and who submitted a current medical examiner's certificate to the State in accordance with § 383.71(h) of this chapter documenting that he or she meets the physical qualification requirements of this part, no longer needs to carry on his or her person the medical examiner's certificate specified at § 391.43(h), or a copy for more than 15 days after the date it was issued as valid proof of medical certification.

This exception does not apply to non-CDL drivers operating a non-CDL commercial motor vehicle or to CDL drivers that have self-certified as intrastate only and have a "U" restriction on their CDL.

http://www.dol.wa.gov/about/videos.php?v=YbrsmPh2Eeo

Part 391.43 contains instructions for performing and recording physical examinations. The primary physical requirements are:

- Drivers must have good eyesight. Glasses or contact lenses are permitted.
- Drivers must hear well. Hearing aids are permitted.
- Drivers must not use nor be addicted to amphetamines, narcotics, or other drugs that may keep the driver from driving safely.
- Drivers cannot be clinically diagnosed as an alcoholic.

Common diseases or health problems that may keep a driver from passing the physical are:

- Chronic high blood pressure.
- Diabetes, if controlled by insulin.
- Breathing problems such as asthma and emphysema.
- Disqualifying heart disease.
- Impairment of normal body movements.
- Sickness that could cause fainting or "blackout."
- Mental or nervous problems.

Information Regarding Application for INTRASTATE Medical Waivers:

There are provisions for waiver or disqualification for certain physical defects if the individual is otherwise qualified to drive. If a driver has lost or cannot use a foot, leg, hand, finger(s), or an arm, he/she cannot drive until a waiver is obtained.

The policy described below applies to commercial motor vehicle drivers who carry a Commercial Driver's License (CDL) but are not physically qualified to drive under the medical requirements of the Federal Motor Carrier Safety Regulations.

Procedure: Providing the driver is otherwise qualified to operate a commercial motor vehicle, a letter of application for a waiver must be submitted jointly by the person who seeks a waiver of the physical disqualification (driver applicant) and by the motor carrier that will employ the driver applicant. (If the driver is self-employed or currently unemployed, a letter from the motor carrier is not necessary.)

The letter must show:

- Name and complete address of the employing motor carrier.
- Name, license number and complete address of the driver applicant.
- Description of the driver applicant's impairment for which the waiver is requested.

The letter must be accompanied by:

- A copy of the DOT physical form (long form) showing the results of the medical examination.
- A medical evaluation summary completed by either a board qualified or board certified physician or orthopedic surgeon.

The medical evaluation summary must include:

- A statement by the doctor on how and why the impairment interferes with the ability of the driver to perform normal tasks associated with operating a commercial motor vehicle.
- An assessment and medical opinion of whether the condition will likely remain medically stable for at least two years.

MEDICAL ADVISORY CRITERIA SYNOPSIS

1. No loss of a foot, leg, hand or arm.
2. No impairment of a hand, finger, arm, foot, or leg, which interferes with the ability to perform normal tasks.
3. No clinical diagnosis or medical history of diabetes mellitus requiring insulin.
4. No clinical diagnosis of myocardial infarction, angina pectoris, coronary insufficiency, thrombosis or cardiovascular disease known to be accompanied by syncope, dyspnea, collapse, or congestive cardiac failure.
5. No clinical diagnosis of respiratory dysfunction.
6. No clinical diagnosis of high blood pressure.
7. No clinical diagnosis of rheumatic, arthritic, orthopedic, muscular, neuromuscular or vascular disease which interferes with the ability to control and operate a motor vehicle.
8. No established medical history or clinical diagnosis of epilepsy.
9. No mental, nervous, organic or functional disease or psychiatric disorder likely to interfere with the ability to operate a motor vehicle.
10. Distant visual acuity of at least 20/40 (Snellen) in each eye with or without corrective lenses.
11. Adequate hearing ability.
12. Does not use a controlled substance.
13. No current diagnosis of alcoholism.

Please Note: Department of Licensing issues waivers only for CDL drivers -- they do not issue waivers for non-CDL drivers.

INTRASTATE NON-CDL PASSENGER VEHICLE DRIVERS

WAC 480-30-226(2) & (3)

(1)**Doctor's statement of intrastate medical waiver.** A passenger transportation company may employ a driver that is not physically qualified to drive a commercial motor vehicle under Title 49 C.F.R. Part 391.41, if the driver:

(a) Holds a valid Washington state driver's license;

(b) Has received a doctor's statement that:

(i) The driver's medical condition is not likely to interfere with the driver's ability to safely operate a commercial motor vehicle; and

(ii) The doctor's opinion is that the driver's condition is likely to remain stable for the two years that the medical certificate is valid.

(c) Operates commercial motor vehicles intrastate wholly within the state of Washington. For the purposes of a doctor's statement of intrastate medical waiver, a commercial motor vehicle means a motor vehicle:

(i) With a gross vehicle weight rating under 26,001 lbs.,

(ii) Transporting fifteen or fewer passengers, including the driver, or

(iii) With a manufacturer's seating capacity of fifteen or fewer passengers, including the driver.

(2) **Driver qualification files.** A passenger transportation company that employs a driver under an intrastate medical waiver must maintain in the driver's qualification file a copy of the doctor's statement of intrastate medical waiver.

For more information contact:

Department of Licensing
CDL Medical Waiver Program
P O Box 9030
Olympia, WA 98507
Telephone: (360) 902-3859
FAX: (360) 586-8351

Multiple-employer drivers: (A driver who in any period of 7 consecutive days is employed or used
as a driver by more than a single motor carrier.) The items that must be in a driver qualification file for a multiple-employer driver are the same as those for a regularly employed driver, except the file need not contain:

- An application for employment.
- Inquiries to past employers and state agencies.
- Annual review of driving record.
- Written record of violations.

The carrier must have on file the following information for multiple-employer drivers:

- Driver's name.
- Social Security Number.
- Motor vehicle operator's license.
- Road test and certificate.
- Controlled substance test results.

Drivers furnished by other motor carriers. A motor carrier using a driver regularly employed by another motor carrier must have on file a signed written certificate that includes the following information:

- Driver's name and signature.
- Certification of the driver's full qualifications.
- Expiration date of the driver's medical certificate.
- Compliance with drug and alcohol testing requirements.

The following records may be removed from the driver's qualification file, three (3) years after the date of execution:

- Response of each State agency to the annual driver record inquiry.
- Note relating to annual review of the driver's driving record.
- List or certificate relating to violations of motor vehicle laws.
- Medical examiner's certificate.
- Letter granting a waiver of a physical disqualification.

DRIVER INVESTIGATIVE HISTORY FILE (DIHF) (391.53)

1. Carrier is required to obtain and review prospective driver's safety performance history as a commercial motor vehicle driver.
2. Information contained in this file must be kept in a secured location with limited access.
3. DIHF may be kept with other files, as long as all records are kept confidential and secured, with limited access. (Makes more sense to be here with the other point referencing locations.)
4. DIHF does not have to be kept on those drivers not hired.
5. Applies to drivers hired after October 29th, 2004.
6. The DIHF must contain, as a minimum, the following information:
   - Copy of the driver's written authorization for the motor carrier to seek information about a driver's alcohol and controlled substance history.
   - A copy of the responses received for investigations into:
     - General driver identification and employment verification, including previous employer's name and address, date of contact, and information received.
     - Accident Information for the previous three years.
     - Part B violations of Part 382/Part 40.
     - Whether a driver failed to undertake or complete a rehabilitation program prescribed by a SAP.
     - Violations occurring after completion of a referral program.
     - Documentation of failures to contact a previous employer, or of the previous employer's failure to provide the required safety performance history.

Previous Employer's Response:

1. Must respond within 30 days after receiving the request.
2. Required to send a response confirming the non-existence of any safety performance history.
3. Provide contact information for any rebuttal.
4. Keep a record of each request for one year, including date, party to whom it was released, and a summary of what was provided.

DUE PROCESS RIGHTS

The driver applicant has the right to:

- Review the information provided by the previous employer(s).
- Have errors in the information corrected by the previous employer(s) and have that corrected information sent to the prospective employer.
- Have a rebuttal statement attached to the alleged erroneous information.

DRIVER QUALIFICATION FILE CHECKLIST 391.51

1. _____ **Driver's Application for Employment** - A person will not be allowed to drive a commercial motor vehicle unless he/she has completed and signed an application for employment. NOTE: The application form must, as a minimum, contain the information in 391.21(b).	**49 CFR, 391.21**
2. _____ **Driver Investigative History File** **- Documentation required by CFR Part 391.23 regarding the driver's Safety Performance History. Refer to Page #75.	**49 CFR, 391.53**
3. _____ **Inquiry to State Agencies** - An investigation into the employee's driving record for the preceding three years. This investigation must be made within 30 days of the date his/her employment begins.	**49 CFR, 391.21(a) (1) & (b)**
4. _____ **Annual Review of Driving Record.** At least once every 12 months, a motor carrier must review the driving record of each driver. A note stating the results of this review shall be included in the driver's qualification file. At lease once every 12 months, a motor carrier must make an inquiry into the driving record of each driver.	**49 CFR, 391.25**
5. _____ **Annual Driver's Certification of Violations.** At lease once every 12 months, a motor carrier must require each driver that it employs to prepare and furnish it with a list of all violations of motor vehicle traffic laws and ordinances during the previous 12 months.	**49 CFR, 391.27**
6. _____ **Driver's Road Test and Certificate** (or equivalent). A person must not be allowed to drive a commercial motor vehicle until he/she has successfully completed a road test and has been issued a certificate, or a copy of the license or certificate that the motor carrier accepted as equivalent to the driver's road test, pursuant to section 391.33	**49 CFR, 391.31 & 33**
7. _____ **Non-CDL Drivers & Self-Certified Intrastate CDL Drivers**. **Medical Examiner's Certificate**. The driver must pass a medical examination conducted by a certified medical examiner that is listed on the National Registry. A driver must be issued a medical examiner's certificate, which must be carried at all times, and renewed at least every two years. A copy of the medical certificate must be kept in the driver file. _____ **CDL Drivers (Interstate Only)**. **Medical Examiner's Certificate**. The driver must pass a medical examination conducted by a certified medical examiner that is listed on the National Registry. A valid medical certificate can be used up to 15 days after issuance. After 15 days, the CDLIS motor vehicle record obtained from the current licensing state must be in the driver qualification file.	**49 CFR, 391.42 & 45 & 51** **See Exception Page 70**
8. _____ **LCV Certificate of Training or Certificate of Grand fathering.** A person must not be allowed to drive a LCV until he/she has been issued a LCV Driver-Training Certificate or a LCV Driver-Training Certificate of Grand fathering.	**49 CFR, 380.505 & 380.111**
9. _____ **Entry-Level Driver-Training Certificate** (CDL Driver only). A person must not be allowed to drive a CMV requiring a CDL without first obtaining the required Entry-Level Driver-Training Certificate.	**49 CFR, 380.500**
10. _____ **Medical Examiner Verification**. Carriers must maintain in the driver's qualification file a note relating to verification of medical examiner listing on the National Registry of Certified Medical Examiners.	**49 CFR, 391.23(m)**

***The prospective motor carrier must:**

- Inform the applicant that the information provided on the application concerning previous employers may be used, and the applicant's previous employers will be contacted, for the purpose of investigating the applicant's safety performance history.
- Notify the driver in writing of his/her due process rights (see Due Process Rights in 391.23).

** Records must be maintained in secured location with controlled access.

APPLICATION FOR EMPLOYMENT

COMPANY_____ STREET ADDRESS_____

CITY, STATE AND ZIP CODE_____

APPLICANT'S NAME_____
(First) (Middle) (Maiden Name, if any) (Last)

ADDRESS_____ HOW LONG?_____
(Street) (City) (State and Zip Code)

DATE OF BIRTH_____ PHONE _____ SOCIAL SECURITY NO._____

PAST ADDRESSES (previous three years)

	STREET	CITY	STATE & ZIP CODE	HOW LONG?
1				
2				
3				
4				

(ATTACH SHEET IF MORE SPACE IS NEEDED)

EXPERIENCE AND QUALIFICATIONS--DRIVER

DRIVER LICENSE	STATE	LICENSE NUMBER	TYPE	EXPIRATION DATE

DRIVING EXPERIENCE

CLASS OF EQUIPMENT	TYPE OF EQUIPMENT (VAN,TANK,FLAT,ETC.)	DATES FROM	TO	APPROX. # OF MILES (TOTAL)
STRAIGHT TRUCK				
TRACTOR/SEMI-TRAILER				
TRACTOR/2 TRAILERS				
OTHER:				

ACCIDENT RECORD FOR PAST 3 YEARS OR MORE (ATTACH SHEET IF MORE SPACE IS NEEDED)

DATES	NATURE OF ACCIDENT (HEAD-ON, REAR-END, UPSET, ETC.)	FATALITIES	INJURIES

(Form 2 Rev. 10-2001)

TRAFFIC CONVICTIONS AND FORFEITURES FOR THE PAST 3 YEARS (OTHER THAN PARKING VIOLATIONS)

LOCATION	DATE	CHARGE	PENALTY

(ATTACH SHEET IF MORE SPACE IS NEEDED)

A. Have you ever been denied a license, permit or privilege to operate a motor vehicle? YES_____ NO_____

B. Has any license, permit, or privilege ever been suspended or revoked? YES_____ NO_____

IF THE ANSWER TO EITHER A OR B IS YES, ATTACH A STATEMENT GIVING FULL DETAILS

EMPLOYMENT RECORD (Attach Sheet if More Space is Needed)

Note: DOT requires that employment for at least 3 years and/or Commercial Driving experience (CDL)for the past 10 years be shown.

LAST EMPLOYER NAME _____

ADDRESS _____

POSITION HELD _____ FROM_____ TO_____ SALARY _____

REASON FOR LEAVING _____

Subject to Federal Motor Carrier Safety Regulations YES _____ NO _____

Performed safety sensitive function subject to DOT Controlled Substance/Alcohol testing YES _____ NO _____

SECOND LAST EMPLOYER NAME _____

ADDRESS _____

POSITION HELD _____ FROM_____ TO_____ SALARY _____

REASON FOR LEAVING _____

Subject to Federal Motor Carrier Safety Regulations: YES _____ NO _____

Performed safety sensitive function subject to DOT Controlled Substance/Alcohol testing YES _____ NO _____

THIRD LAST EMPLOYER NAME _____

ADDRESS _____

POSITION HELD _____ FROM_____ TO_____ SALARY _____

REASON FOR LEAVING _____

Subject to Federal Motor Carrier Safety Regulations: YES _____ NO _____

Performed safety sensitive function subject to DOT Controlled Substance/Alcohol testing YES _____ NO _____

TO BE READ AND SIGNED BY APPLICANT

This certifies that this application was completed by me, and that all entries on it and information in it are true and complete to the best of my knowledge.

_____ _____

(Date) (Applicant's Signature)

NOTE: A motor carrier may require an applicant to provide information in addition to the information required by the Federal Motor Carrier Safety Regulations.

(Form 2 - Rev. 1-2004)

SAFETY PERFORMANCE HISTORY RECORDS REQUEST

PART 1: TO BE COMPLETED BY PROSPECTIVE EMPLOYEE

I, (Print Name) _____ _____
First M.I. Last Social Security Number

Hereby authorize: _____
Date of Birth

Previous Employer: _____ Email: _____

Street: _____ Telephone: _____

City, State, Zip: _____ Fax No.: _____

To release and forward the information requested by section 3 of this document concerning my Alcohol and Controlled Substances Testing records within the previous 3 years from _____.
(employment application date)

To: Prospective Employer: _____

Attention: _____ Telephone: _____

Street: _____

City, State, Zip: _____

In compliance with §40.25(g) and 391.23(h), release of this information must be made in a written form that ensures confidentiality, such as fax, email, or letter.

Prospective employer's fax number: _____

Prospective employer's email address: _____

_____ _____
Applicant's Signature Date

This information is being requested in compliance with §40.25(g) and 391.23.

PART 2: TO BE COMPLETED BY PREVIOUS EMPLOYER

ACCIDENT HISTORY

The applicant named above was employed by us. Yes ☐ No ☐

Employed as _____ from (m/y) _____ to (m/y) _____

1. Did he/she drive motor vehicle for you? Yes ☐ No ☐ If yes, what type? Straight Truck ☐ Tractor-Semitrailer ☐ Bus ☐ Cargo Tank ☐ Doubles/Triples ☐ Other (Specify) _____

2. Reason for leaving your employ: Discharged ☐ Resignation ☐ Lay Off ☐ Military Duty ☐

If there is no safety performance history to report, check here ☐, sign below and return.

ACCIDENTS: Complete the following for any accidents included on your accident register (§390.15(b)) that involved the applicant in the 3 years prior to the application date shown above, or check ☐ here if there is no accident register data for this driver.

	Date	Location	# Injuries	# Fatalities	Hazmat Spill
1.					
2.					
3.					

Please provide information concerning any other accidents involving the applicant that were reported to government agencies or insurers or retained under internal company policies: _____

_____

_____

Any other remarks:

_____

_____

_____

Signature: _____

Title: _____ Date: _____

PREVIOUS EMPLOYER – COMPLETE PAGE 2 PART 3

PART 3:	TO BE COMPLETED BY PREVIOUS EMPLOYER

DRUG AND ALCOHOL HISTORY

If driver was not subject to Department of Transportation testing requirements while employed by this employer, please check here ☐, fill in the dates of employment from _____ to _____, complete bottom of Part 3, sign, and return.

Driver was subject to Department of Transportation testing requirements from _____ to _____.

1. Has this person had an alcohol test with the result of 0.04 or higher alcohol concentration?
   YES ☐ NO ☐
2. Has this person tested positive or adulterated or substituted a test specimen for controlled substances?
   YES ☐ NO ☐
3. Has this person refused to submit to a post-accident, random, reasonable suspicion, or follow-up alcohol or controlled substance test?
   YES ☐ NO ☐
4. Has this person committed other violations of Subpart B of Part 382, or Part 40?
   YES ☐ NO ☐
5. If this person has violated a DOT drug and alcohol regulation, did this person complete a SAP-prescribed rehabilitation program in your employ, including return-to-duty and follow-up tests? If yes, please send documentation back with this form.
   YES ☐ NO ☐
6. For a driver who successfully completed a SAP's rehabilitation referral and remained in your employ, did this driver subsequently have an alcohol test result of 0.04 or greater, a verified positive drug test, or refuse to be tested?
   YES ☐ NO☐

In answering these questions, include any required DOT drug or alcohol testing information obtained from prior previous employers in the previous 3 years prior to the application date shown on page 1.

Name: _____

Company: _____

Street: _____

City, State, Zip: _____ Telephone: _____

Part 3 Completed by (Signature): _____ Date: _____

PART 4a:	TO BE COMPLETED BY PROSPECTIVE EMPLOYER

This form was (check one) ☐ Faxed to previous employer ☐ Mailed ☐ Emailed ☐ Other _____

By: _____ Date: _____

PART 4b:	TO BE COMPLETED BY PROSPECTIVE EMPLOYER

Complete below when information is obtained.

Information received from: _____

Recorded by: _____ Method: ☐ Fax ☐ Mail ☐ Email ☐ Telephone

Date: _____ ☐ Other _____

INSTRUCTIONS TO COMPLETE THE SAFETY PERFORMANCE HISTORY RECORDS REQUEST

PAGE 1 PART 1: Prospective Employee
- Complete the information required in this section
- Sign and date
- Submit to the Prospective Employer

PAGE 2 PART 4a: Prospective Employer
- Complete the information
- Send to Previous Employer

PAGE 1 PART 2: Previous Employer
- Complete the information required in this section
- Sign and date
- Turn form over to complete SIDE 2 SECTION 3

PAGE 2 PART 3: Previous Employer
- Complete the information required in this section
- Sign and date
- Return to Prospective Employer

PAGE 2 PART 4b: Prospective Employer
- Record receipt of the information
- Retain the form

RECORDS REQUEST FOR DRIVER/APPLICANT SAFETY PERFORMANCE HISTORY

This request is made by the driver/applicant in compliance with the Department of Transportation regulations.

§391.23(i)(2) Drivers who have previous Department of Transportation regulated employment history in the preceding three years, and wish to review previous employer-provided investigative information must submit a written request to the prospective employer, which may be done at any time, including when applying, or as late as thirty (30) days after being employed or being notified of denial of employment. The prospective employer must provide this information to the applicant within five (5) business days of receiving the written request. If the prospective employer has not yet received the requested information from the previous employer(s), then the five-business-days deadline will begin when the prospective employer receives the requested safety-performance history information. If the driver has not arranged to pick up or receive the requested records within thirty (30) days of the prospective employer making them available, the prospective motor carrier may consider the driver to have waived his/her request to review the records.

PART 1: COMPLETED BY THE DRIVER/APPLICANT

TO:

Prospective Employer: _____

Street/P.O. Box: _____

City, State, Zip: _____ Telephone # _____

FROM:

Driver/Applicant: _____ Social Security/I.D. # _____

Street: _____

City, State, Zip: _____ Telephone # _____

I am submitting this written request to obtain copies of my Department of Transportation Safety Performance History for the preceding three years. I understand, for records requested from a prospective employer, that I must arrange to pick up or receive the requested records within thirty (30) days of the records being made available or I have waived my request to review the records.

This information should be: ☐ sent to me at the above address.
☐ I will arrange to pick up.

Driver/Applicant Signature: _____ Date: _____/_____/_____
M D Y

PART 2: COMPLETED BY THE PROSPECTIVE EMPLOYER

The information must be provided to the applicant within five (5) business days of receiving the written request. If the prospective employer has not yet received the requested information form the previous employer(s), then the five-business-days deadline will begin when the prospective employer receives the requested safety performance history information.

Information supplied to:

Name: _____

Street: _____

City, State, Zip: _____

Comments: _____

_____

By:

_____ _____ Release Date: _____/_____/_____
Signature/person providing information Telephone # M D Y

COPY 1 PROSPECTIVE EMPLOYER

SAFETY PERFORMANCE HISTORY INFORMATION
DRIVER/APPLICANT REBUTTAL

This rebuttal is made by the driver/applicant in compliance with the Department of Transportation regulations.

§391.23(j)(3) Drivers wishing to rebut information in records received pursuant to paragraph (i) of this section must send the rebuttal to the previous employer with instructions to include the rebuttal in that driver's safety performance history.

§391.23(j)(4) After October 29, 2004, within five business days of receiving a rebuttal from a driver, the previous employer must:

(i) Forward a copy of the rebuttal to the prospective motor carrier employer;

(ii) Append the rebuttal to the driver's information in the carrier's appropriate file, to be included as part of the response for any subsequent investigating prospective employers for the duration of the three-year data retention requirements.

PART 1:	COMPLETED BY THE DRIVER/APPLICANT

TO:

Previous Employer: _____

Street/P.O. Box: _____

City, State, Zip: _____

Telephone: _____ Fax: _____

FROM:

Driver/Applicant: _____ _____
Social Security #

Street: _____

City, State, Zip: _____ Telephone No.: _____

I have submitted this rebuttal to my previous employer requesting that it be attached to my Safety Performance History and provided to subsequent prospective employers.

Reason for the rebuttal (attach documents as necessary): _____

_____

_____

_____

_____

_____

_____

_____

_____

_____

_____

_____

_____

_____

_____

_____

I request that this rebuttal be sent to the attached list of motor carriers.

Driver/Applicant Signature: _____ Date: _____/_____/_____
M D Y

PART 2:	COMPLETED BY THE PREVIOUS EMPLOYER

Received by:

Signature: _____ Date: _____/_____/_____
M D Y

COPY 1 PREVIOUS EMPLOYER

CORRECTION REQUEST
OF
ERRONEOUS SAFETY PERFORMANCE HISTORY INFORMATION

This request is made by the driver/applicant in compliance with the Department of Transportation regulations, §391.23, investigations and inquiries, paragraphs (j)(1) and (2) as printed below.

§391.23(j)(1) Driver wishing to request correction of erroneous information in records received pursuant to paragraph (i) of this section must send the request for the correction to the previous employer that provided the records to the prospective employer.

§391.23(j)(2) After October 29, 2004, the previous employer must either correct and forward the information to the prospective motor carrier employer, or notify the driver within 15 days of receiving a driver's request to correct the data that it does not agree to correct the data. If the previous employer corrects and forwards the data as requested, that employer must also retain the corrected information as part of the driver's safety performance history record and provide it to subsequent prospective employers when requests for this information are received. If the previous employer corrects the data and forwards it to the prospective motor carrier employer, there is no need to notify the driver.

PART 1: COMPLETED BY THE DRIVER/APPLICANT

TO: Prospective Employer: _____

Street/P.O. Box: _____

City, State, Zip: _____ Telephone # _____

FROM: Driver/Applicant: _____

Social Security/I.D. # _____

Street: _____

City, State, Zip: _____ Telephone # _____

I request correction of erroneous information in my Safety Performance History. Please forward to the following prospective employer: Company Name: _____

Attention: _____

Street: _____

City, State, Zip: _____

Explanation of desired correction (attach documents as necessary)_____

_____

_____

Driver/Applicant Signature: _____ Date: _____/_____/_____

M D Y

Driver: Retain **COPY 4 DRIVER RECORD** for your files, Submit copies 1, 2, and 3 to your previous employer.

PART 2: COMPLETED BY THE PREVIOUS EMPLOYER

Disposition of the requested information:

☐ Information was corrected and forwarded to the prospective motor carrier employer.

☐ The driver was notified on _____/_____/_____ that the previous employer does not agree to correct the data.

Return copy 3 to the driver.

Information sent to: Company Name: _____

Attention: _____

Street: _____

City, State, Zip: _____

Comments: _____

_____

By: _____ _____ Release Date: _____/_____/_____

Signature/person providing information Telephone # M D Y

PART 3: COMPLETED BY THE PROSPECTIVE MOTOR CARRIER EMPLOYER

The corrected information was received on _____/_____/_____

Prospective Employer: _____ Location: _____

Received by: _____ _____

Signature Title

COPY 1 PROSPECTIVE EMPLOYER

Medical Examination Report
FOR COMMERCIAL DRIVER FITNESS DETERMINATION

649-F (6045)

1. DRIVER'S INFORMATION Driver completes this section

Driver's Name (Last, First, Middle)	Social Security No.	Birthdate M / D / Y	Age	Sex ☐ M ☐ F	New Certification ☐ Recertification ☐ Follow-up ☐	Date of Exam

Address	City, State, Zip Code	Work Tel: ( ) Home Tel: ( )	Driver License No.	License Class ☐ A ☐ B ☐ C ☐ D ☐ Other	State of Issue

2. HEALTH HISTORY Driver completes this section, but medical examiner is encouraged to discuss with driver.

Yes No

- ☐ ☐ Any illness or injury in the last 5 years?
- ☐ ☐ Head/Brain injuries, disorders or illnesses
- ☐ ☐ Seizures, epilepsy
  - ☐ medication_____
- ☐ ☐ Eye disorders or impaired vision (except corrective lenses)
- ☐ ☐ Ear disorders, loss of hearing or balance
- ☐ ☐ Heart disease or heart attack; other cardiovascular condition
  - ☐ medication_____
- ☐ ☐ Heart surgery (valve replacement/bypass, angioplasty, pacemaker)
- ☐ ☐ High blood pressure medication_____
- ☐ ☐ Muscular disease
- ☐ ☐ Shortness of breath

Yes No

- ☐ ☐ Lung disease, emphysema, asthma, chronic bronchitis
- ☐ ☐ Kidney disease, dialysis
- ☐ ☐ Liver disease
- ☐ ☐ Digestive problems
- ☐ ☐ Diabetes or elevated blood sugar controlled by:
  - ☐ diet
  - ☐ pills
  - ☐ insulin
- ☐ ☐ Nervous or psychiatric disorders, e.g., severe depression
  - medication_____
- ☐ ☐ Loss of, or altered consciousness

Yes No

- ☐ ☐ Fainting, dizziness
- ☐ ☐ Sleep disorders, pauses in breathing while asleep, daytime sleepiness, loud snoring
- ☐ ☐ Stroke or paralysis
- ☐ ☐ Missing or impaired hand, arm, foot, leg, finger, toe
- ☐ ☐ Spinal injury or disease
- ☐ ☐ Chronic low back pain
- ☐ ☐ Regular, frequent alcohol use
- ☐ ☐ Narcotic or habit forming drug use

For any YES answer, indicate onset date, diagnosis, treating physician's name and address, and any current limitation. List all medications (including over-the-counter medications) used regularly or recently.

_____

_____

_____

I certify that the above information is complete and true. I understand that inaccurate, false or missing information may invalidate the examination and my Medical Examiner's Certificate.

Driver's Signature_____ Date_____

Medical Examiner's Comments on Health History (The medical examiner must review and discuss with the driver any "yes" answers and potential hazards of medications, including over-the-counter medications, while driving. This discussion must be documented below.)

_____

_____

_____

_____

TESTING (Medical Examiner completes Section 3 through 7) Name: Last, First, Middle,

3. VISION

Standard: At least 20/40 acuity (Snellen) in each eye with or without correction. At least 70 degrees peripheral in horizontal meridian measured in each eye. The use of corrective lenses should be noted on the Medical Examiner's Certificate.

INSTRUCTIONS: When other than the Snellen chart is used, give test results in Snellen-comparable values. In recording distance vision, use 20 feet as normal. Report visual acuity as a ratio with 20 as numerator and the smallest type read at 20 feet as denominator. If the applicant wears corrective lenses, these should be worn while visual acuity is being tested. If the driver habitually wears contact lenses, or intends to do so while driving, sufficient evidence of good tolerance and adaptation to their use must be obvious. ***Monocular drivers are not qualified.***

Numerical readings must be provided.

ACUITY	UNCORRECTED	CORRECTED	HORIZONTAL FIELD OF VISION
Right Eye	20/	20/	Right Eye °
Left Eye	20/	20/	Left Eye °
Both Eyes	20/	20/	

Applicant can recognize and distinguish among traffic control signals and devices showing standard red, green, and amber colors ? ☐ Yes ☐ No

Applicant meets visual acuity requirement only when wearing:
☐ Corrective Lenses

Monocular Vision: ☐ Yes ☐ No

Complete next line only if vision testing is done by an opthalmologist or optometrist

Date of Examination | Name of Ophthalmologist or Optometrist (print) | Tel. No. | License No./ State of Issue | Signature

4. HEARING

Standard: a) Must first perceive forced whispered voice ≥ 5 ft., with or without hearing aid, or b) average hearing loss in better ear ≤ 40 dB
☐ Check if hearing aid used for tests. ☐ Check if hearing aid required to meet standard.

INSTRUCTIONS: To convert audiometric test results from ISO to ANSI, -14 dB from ISO for 500Hz, -10dB for 1,000 Hz, -8.5 dB for 2000 Hz. To average, add the readings for 3 frequencies tested and divide by 3.

Numerical readings must be recorded.

a) Record distance from individual at which forced whispered voice can first be heard.	Right ear \ Feet	Left Ear \ Feet

b) If audiometer is used, record hearing loss in decibels. (acc. to ANSI Z24.5-1951)	Right Ear			Left Ear		
	500 Hz	1000 Hz	2000 Hz	500 Hz	1000 Hz	2000 Hz
	Average:			Average:		

5. BLOOD PRESSURE/ PULSE RATE

Numerical readings must be recorded. Medical Examiner should take at least two readings to confirm BP.

Blood Pressure	Systolic	Diastolic

Driver qualified if ≤140/90.

Pulse Rate: ☐ Regular ☐ Irregular

Record Pulse Rate:_____

Reading	Category	Expiration Date	Recertification
140-159/90-99	Stage 1	1 year	1 year if ≤140/90. One-time certificate for 3 months if 141-159/91-99.
160-179/100-109	Stage 2	One-time certificate for 3 months.	1 year from date of exam if ≤140/90
≥180/110	Stage 3	6 months from date of exam if <140/90	6 months if ≤ 140/90

6. LABORATORY AND OTHER TEST FINDINGS

Numerical readings must be recorded.

URINE SPECIMEN	SP. GR.	PROTEIN	BLOOD	SUGAR

Urinalysis is required. Protein, blood or sugar in the urine may be an indication for further testing to rule out any underlying medical problem.
Other Testing (Describe and record) _____

7. PHYSICAL EXAMINATION Height:_____ (in.) Weight:_____(lbs.) Name: Last, First, Middle,

The presence of a certain condition may not necessarily disqualify a driver, particularly if the condition is controlled adequately, is not likely to worsen or is readily amenable to treatment. Even if a condition does not disqualify a driver, the medical examiner may consider deferring the driver temporarily. Also, the driver should be advised to take the necessary steps to correct the condition as soon as possible particularly if the condition, if neglected, could result in more serious illness that might affect driving.

Check YES if there are any abnormalities. Check NO if the body system is normal. Discuss any YES answers in detail in the space below, and indicate whether it would affect the driver's ability to operate a commercial motor vehicle safely. Enter applicable item number before each comment. If organic disease is present, note that it has been compensated for. See *Instructions to the Medical Examiner* for guidance.

BODY SYSTEM	CHECK FOR:	YES*	NO	BODY SYSTEM	CHECK FOR:	YES*	NO
1. General Appearance	Marked overweight, tremor, signs of alcoholism, problem drinking, or drug abuse.			7. Abdomen and Viscera	Enlarged liver, enlarged spleen, masses, bruits, hernia, significant abdominal wall muscle weakness.		
2. Eyes	Pupillary equality, reaction to light, accommodation, ocular motility, ocular muscle imbalance, extraocular movement, nystagmus, exophthalmos. Ask about retinopathy, cataracts, aphakia, glaucoma, macular degeneration and refer to a specialist if appropriate.			8. Vascular System	Abnormal pulse and amplitude, cartoid or arterial bruits, varicose veins.		
				9. Genito-urinary System	Hernias.		
3. Ears	Scarring of tympanic membrane, occlusion of external canal, perforated eardrums.			10. Extremities- Limb impaired. Driver may be subject to SPE certificate if otherwise qualified.	Loss or impairment of leg, foot, toe, arm, hand, finger, Perceptible limp, deformities, atrophy, weakness, paralysis, clubbing, edema, hypotonia. Insufficient grasp and prehension in upper limb to maintain steering wheel grip. Insufficient mobility and strength in lower limb to operate pedals properly.		
4. Mouth and Throat	Irremediable deformities likely to interfere with breathing or swallowing.						
5. Heart	Murmurs, extra sounds, enlarged heart, pacemaker, implantable defibrillator.			11. Spine, other musculoskeletal	Previous surgery, deformities, limitation of motion, tenderness.		
6. Lungs and chest, not including breast examination	Abnormal chest wall expansion, abnormal respiratory rate, abnormal breath sounds including wheezes or alveolar rales, impaired respiratory function, cyanosis. Abnormal findings on physical exam may require further testing such as pulmonary tests and/ or xray of chest.			12. Neurological	Impaired equilibrium, coordination or speech pattern; asymmetric deep tendon reflexes, sensory or positional abnormalities, abnormal patellar and Babinki's reflexes, ataxia.		

***COMMENTS:** _____

Note certification status here. See Instructions to the Medical Examiner for guidance.

- ☐ Meets standards in 49 CFR 391.41; qualifies for 2 year certificate
- ☐ Does not meet standards
- ☐ Meets standards, but periodic monitoring required due to _____.
  Driver qualified only for: ☐3 months ☐6 months ☐1 year ☐ Other

Temporarily disqualified due to (condition or medication):_____

Return to medical examiner's office for follow up on _____

- ☐ Wearing corrective lense
- ☐ Wearing hearing aid
- ☐ Accompanied by a _____waiver/ exemption. Driver must present exemption at time of certification.
- ☐ Skill Performance Evaluation (SPE) Certificate
- ☐ Driving within an exempt intracity zone (See 49 CFR 391.62)
- ☐ Qualified by operation of 49 CFR 391.64

Medical Examiner's signature _____
Medical Examiner's name _____
Address _____
Telephone Number _____

If meets standards, complete a Medical Examiner's Certificate as stated in 49 CFR 391.43(h). (Driver must carry certificate when operating a commercial vehicle.)

49 CFR 391.41 Physical Qualifications for Drivers

THE DRIVER'S ROLE

Responsibilities, work schedules, physical and emotional demands, and lifestyles among commercial drivers vary by the type of driving that they do. Some of the main types of drivers include the following: turn around or short relay (drivers return to their home base each evening); long relay (drivers drive 9-11 hours and then have at least a 10-hour off-duty period), straight through haul (cross country drivers); and team drivers (drivers share the driving by alternating their 5-hour driving periods and 5-hour rest periods.)

The following factors may be involved in a driver's performance of duties: abrupt schedule changes and rotating work schedules, which may result in irregular sleep patterns and a driver beginning a trip in a fatigued condition; long hours; extended time away from family and friends, which may result in lack of social support; tight pickup and delivery schedules, with irregularity in work, rest, and eating patterns, adverse road, weather and traffic conditions, which may cause delays and lead to hurriedly loading or unloading cargo in order to compensate for the lost time; and environmental conditions such as excessive vibration, noise, and extremes in temperature. Transporting passengers or hazardous materials may add to the demands on the commercial driver.

There may be duties in addition to the driving task for which a driver is responsible and needs to be fit. Some of these responsibilities are: coupling and uncoupling trailer(s) from the tractor, loading and unloading trailer(s) (sometimes a driver may lift a heavy load or unload as much as 50,000 lbs. of freight after sitting for a long period of time without any stretching period); inspecting the operating condition of tractor and/or trailer(s) before, during and after delivery of cargo; lifting, installing, and removing heavy tire chains; and, lifting heavy tarpaulins to cover open top trailers. The above tasks demand agility, the ability to bend and stoop, the ability to maintain a crouching position to inspect the underside of the vehicle, frequent entering and exiting of the cab, and the ability to climb ladders on the tractor and/or trailer(s).

In addition, a driver must have the perceptual skills to monitor a sometimes complex driving situation, the judgment skills to make quick decisions, when necessary, and the manipulative skills to control an oversize steering wheel, shift gears using a manual transmission, and maneuver a vehicle in crowded areas.

§391.41 PHYSICAL QUALIFICATIONS FOR DRIVERS

(a) A person shall not drive a commercial motor vehicle unless he is physically qualified to do so and, except as provided in §391.67, has on his person the original, or a photographic copy, of a medical examiner's certificate that he is physically qualified to drive a commercial motor vehicle.

(b) A person is physically qualified to drive a motor vehicle if that person:

(1) Has no loss of a foot, a leg, a hand, or an arm, or has been granted a Skill Performance Evaluation (SPE) Certificate (formerly Limb Waiver Program) pursuant to §391.49.

(2) Has no impairment of: (i) A hand or finger which interferes with prehension or power grasping; or (ii) An arm, foot, or leg which interferes with the ability to perform normal tasks associated with operating a commercial motor vehicle; or any other significant limb defect or limitation which interferes with the ability to perform normal tasks associated with operating a commercial motor vehicle; or has been granted a SPE Certificate pursuant to §391.49.

(3) Has no established medical history or clinical diagnosis of diabetes mellitus currently requiring insulin for control;

(4) Has no current clinical diagnosis of myocardial infarction, angina pectoris, coronary insufficiency, thrombosis, or any other cardiovascular disease of a variety known to be accompanied by syncope, dyspnea, collapse, or congestive cardiac failure.

(5) Has no established medical history or clinical diagnosis of a respiratory dysfunction likely to interfere with his ability to control and drive a commercial motor vehicle safely.

(6) Has no current clinical diagnosis of high blood pressure likely to interfere with his ability to operate a commercial motor vehicle safely.

(7) Has no established medical history or clinical diagnosis of rheumatic, arthritic, orthopedic, muscular, neuromuscular, or vascular disease which interferes with his ability to control and operate a commercial motor vehicle safely.

(8) Has no established medical history or clinical diagnosis of epilepsy or any other condition which is likely to cause loss of consciousness or any loss of ability to control a commercial motor vehicle;

(9) Has no mental, nervous, organic, or functional disease or psychiatric disorder likely to interfere with his ability to drive a commercial motor vehicle safely;

(10) Has distant visual acuity of at least 20/40 (Snellen) in each eye without corrective lenses or visual acuity separately corrected to 20/40 (Snellen) or better with corrective lenses, distant binocular acuity of at least 20/40 (Snellen) in both eyes with or without corrective lenses, field of vision of at least 70degrees in the horizontal meridian in each eye, and the ability to recognize the colors of traffic signals and devices showing standard red, green and amber;

(11) First perceives a forced whispered voice in the better ear not less than 5 feet with or without the use of a hearing aid, or, if tested by use of an audiometric device, does not have an average hearing loss in the better ear greater than 40 decibels at 500 Hz, 1,000 Hz and 2,000 Hz with or without a hearing device when the audiometric device is calibrated to the American National Standard (formerly ASA Standard) Z24.5-1951;

(12)(i) Does not use any drug or substance identified in 21 CFR 1308.11 Schedule I, an amphetamine, a narcotic, or other habit-forming drug.

(ii) Does not use any non-Schedule I drug or substance that is identified in the other Schedules in 21 part 1308 except when the use is prescribed by a licensed medical practitioner, as defined in § 382.107, who is familiar with the driver’s medical history and has advised the driver that the substance will not adversely affect the driver’s ability to safely operate a commercial motor vehicle.

(13) Has no current clinical diagnosis of alcoholism.

INSTRUCTIONS TO THE MEDICAL EXAMINER

General Information

The purpose of this examination is to determine a driver's physical qualification to operate a commercial motor vehicle (CMV) in interstate commerce according to the requirements in 49 CFR 391.41-49. Therefore, the medical examiner must be knowledgeable of these requirements and guidelines developed by the FMCSA to assist the medical examiner in making the qualification determination. The medical examiner should be familiar with the driver's responsibilities and work environment and is referred to the section on the form, **The Driver's Role**.

In addition to reviewing the **Health History** section with the driver and conducting the physical examination, the medical examiner should discuss common prescriptions and over-the-counter medications relative to the side effects and hazards of these medications while driving. Educate the driver to read warning labels on all medications. History of certain conditions may be cause for rejection, particularly if required by regulation, or may indicate the need for additional laboratory tests or more stringent examination perhaps by a medical specialist. These decisions are usually made by the medical examiner in light of the driver's job responsibilities, work schedule and potential for the conditions to render the driver unsafe.

Medical conditions should be recorded even if they are not cause for denial, and they should be discussed with the driver to encourage appropriate remedial care. This advice is especially needed when a condition, if neglected, could develop into a serious illness that could affect driving.

If the medical examiner determines that the driver is fit to drive and is also able to perform non-driving responsibilities as may be required, the medical examiner signs the medical certificate which the driver must carry with his/her license. The certificate must be dated. **Under current regulations, the certificate is valid for two years, unless the driver has a medical condition that does not prohibit driving but does require more frequent monitoring**. In such situations, the medical certificate should be issued for a shorter length of time. The physical examination should be done carefully and at least as complete as is indicated by the attached form. Contact the FMCSA at (202) 366-1790 for further information (a vision exemption, qualifying drivers under 49 CFR 391.64, etc.).

Interpretation of Medical Standards

Since the issuance of the regulations for physical qualifications of commercial drivers, the Federal Motor Carrier Safety Administration (FMCSA) has published recommendations called Advisory Criteria to help medical examiners in determining whether a driver meets the physical qualifications for commercial driving. These recommendations have been condensed to provide information to medical examiners that (1) is directly relevant to the physical examination and (2) is not already included in the medical examination form. The specific regulation is printed in italics and it's reference by section is highlighted.

Federal Motor Carrier Safety Regulations
-Advisory Criteria-

Loss of Limb:
§391.41(b)(1)
A person is physically qualified to drive a commercial motor vehicle if that person:
Has no loss of a foot, leg, hand or an arm, or has been granted a Skill Performance Evaluation (SPE) Certificate pursuant to Section 391.49.

Limb Impairment:
§391.41(b)(2)
A person is physically qualified to drive a commercial motor vehicle if that person:
Has no impairment of: (i) A hand or finger which interferes with prehension or power grasping; or (ii) An arm, foot, or leg which interferes with the ability to perform normal tasks associated with operating a commercial motor vehicle; or (iii) Any other significant limb defect or limitation which interferes with the ability to perform normal tasks associated with operating a commercial motor vehicle; or (iv) Has been granted a Skill Performance Evaluation (SPE) Certificate pursuant to Section 391.49.

A person who suffers loss of a foot, leg, hand or arm or whose limb impairment in any way interferes with the safe performance of normal tasks associated with operating a commercial motor vehicle is subject to the Skill Performance Evaluation Certification Program pursuant to section 391.49, assuming the person is otherwise qualified.

With the advancement of technology, medical aids and equipment modifications have been developed to compensate for certain disabilities. The SPE Certification Program (formerly the Limb Waiver Program) was designed to allow persons with the loss of a foot or limb or with functional impairment to qualify under the Federal Motor Carrier Safety Regulations (FMCSRs) by use of prosthetic devices or equipment modifications which enable them to safely operate a commercial motor vehicle. Since there are no medical aids equivalent to the original body or limb, certain risks are still present, and thus restrictions may be included on individual SPE certificates when a State Director for the FMCSA determines they are necessary to be consistent with safety and public interest.

If the driver is found otherwise medically qualified (391.41(b)(3) through (13)), the medical examiner must check on the medical certificate that the driver is qualified only if accompanied by a SPE certificate. The driver and the employing motor carrier are subject to appropriate penalty if the driver operates a motor vehicle in interstate or foreign commerce without a curent SPE certificate for his/her physical disability.

Diabetes
§391.41(b)(3)

A person is physically qualified to drive a commercial motor vehicle if that person:
Has no established medical history or clinical diagnosis of diabetes mellitus currently requiring insulin for control.

Diabetes mellitus is a disease which, on occasion, can result in a loss of consciousness or disorientation in time and space. Individuals who require insulin for control have conditions which can get out of control by the use of too much or too little insulin, or food intake not consistent with the insulin dosage. Incapacitation may occur from symptoms of hyperglycemic or hypoglycemic reactions (drowsiness, semiconsciousness, diabetic coma or insulin shock).

The administration of insulin is, within itself, a complicated process requiring insulin, syringe, needle, alcohol sponge and a sterile technique. Factors related to long-haul commercial motor vehicle operations, such as fatigue, lack of sleep, poor diet, emotional conditions, stress, and concomitant illness, compound the dangers, the FMCSA has consistently held that a diabetic who uses insulin for control does not meet the minimum physical requirements of the FMCSRs.

Hypoglycemic drugs, taken orally, are sometimes prescribed for diabetic individuals to help stimulate natural body production of insulin. If the condition can be controlled by the use of oral medication and diet, then an individual may be qualified under the present rule. CMV drivers who do not meet the Federal diabetes standard may call (202) 366-1790 for an application for a diabetes exemption.
(See Conference Report on Diabetic Disorders and Commercial Drivers and Insulin-Using Commercial Motor Vehicle Drivers at:
http://www.fmcsa.dot.gov/rulesregs/medreports.htm)

Cardiovascular Condition
§391.41(b)(4)
A person is physically qualified to drive a commercial motor vehicle if that person:
Has no current clinical diagnosis of myocardial infarction, angina pectoris, coronary insufficiency, thrombosis or any other cardiovascular disease of a variety known to be accompanied by syncope, dyspnea, collapse or congestive cardiac failure.

The term "has no current clinical diagnosis of" is specifically designed to encompass: "*a clinical diagnosis of*" (1) a current cardiovascular condition, or (2) a cardiovascular condition which has not fully stabilized regardless of the time limit The term "*known to be*

accompanied by" is designed to include a clinical diagnosis of a cardiovascular disease (1) which is accompanied by symptoms of syncope, dyspnea, collapse or congestive cardiac failure; and/or (2) which is likely to cause syncope, dyspnea, collapse or congestive cardiac failure.

It is the intent of the FMCSRs to render unqualified, a driver who has a current cardiovascular disease which is accompanied by and/or likely to cause symptoms of syncope, dyspnea, collapse, or congestive cardiac failure. However, the subjective decision of whether the nature and severity of an individual's condition will likely cause symptoms of cardiovascular insufficiency is on an individual basis and qualification rests with the medical examiner and the motor carrier. In those cases where there is an occurrence of cardiovascular insufficiency (myocardial infarction, thrombosis, etc.), it is suggested before a driver is certified that he or she have a normal resting and stress electrocardiogram (ECG), no residual complications and no physical limitations, and is taking no medication likely to interfere with safe driving.

Coronary artery bypass surgery and pacemaker implantation are remedial procedures and thus, not unqualifying. Implantable cardioverter defibrillators are disqualifying due to risk of syncope. Coumadin is a medical treatment which can improve the health and safety of the driver and should not, by its use, medically disqualify the commercial driver. The emphasis should be on the underlying medical condition(s) which require treatment and the general health of the driver. The FMCSA should be contacted at (202) 366-1790 for additional recommendations regarding the physical qualification of drivers on coumadin.
(See Cardiovasular Advisory Panel Guidelines for the Medical examination of Commercial Motor Vehicle Drivers at: http://www.fmcsa.dot.gov/rulesregs/medreports.htm)

Respiratory Dysfunction
§391.41(b)(5)
A person is physically qualified to drive a commercial motor vehicle if that person:
Has no established medical history or clinical diagnosis of a respiratory dysfunction likely to interfere with ability to control and drive a commercial motor vehicle safely.

Since a driver must be alert at all times, any change in his or her mental state is in direct conflict with highway safety. Even the slightest impairment in respiratory function under emergency conditions (when greater oxygen supply is necessary for performance) may be detrimental to safe driving.

There are many conditions that interfere with oxygen exchange and may result in incapacitation, including emphysema, chronic asthma, carcinoma, tuberculosis, chronic bronchitis and sleep apnea. If the medical examiner detects a respiratory dysfunction, that in any way is likely to interfere with the driver's ability to safely control and drive a commercial motor vehicle, the driver must be referred to a specialist for further evaluation and therapy. Anticoagulation therapy for deep vein thrombosis and/or pulmonary thromboembolism is not unqualifying once optimum dose is achieved, provided lower extremity venous examinations remain normal and the treating physician gives a favorable recommendation.
(See Conference on Pulmonary/Respiratory Disorders and Commercial Drivers at:
http://www.fmcsa.dot.gov/rulesregs/medreports.htm

Hypertension
§391.41(b)(6)
A person is physically qualified to drive a commercial motor vehicle if that person:
Has no current clinical diagnosis of high blood pressure likely to interfere with ability to operate a commercial motor vehicle safely.

Hypertension alone is unlikely to cause sudden collapse; however, the likelihood increases when target organ damage, particularly cerebral vascular disease, is present. This regulatory criteria is based on FMCSA's
Cardiovascular Advisory Guidelines for the Examination of CMV Drivers, which used the Sixth Report of the Joint National Committee on Detection, Evaluation, and Treatment of High Blood Pressure (1997).

Stage 1 hypertension corresponds to a systolic BP of 140-159 mmHg and/or a diastolic BP of 90-99 mmHg. The driver with a BP in this range is at low risk for hypertension-related acute incapacitation and may be medically certified to drive for a one-year period.
Certification examinations should be done annually thereafter and should be at or less than 140/90. If less than 160/100, certification may be extended one time for 3 months.

A blood pressure of 160-179 systolic and/or 100-109 diastolic is considered Stage 2 hypertension, and the driver is not necessarily unqualified during evaluation and institution of treatment. The driver is given a one time certification of three months to reduce his or her blood pressure to less than or equal to 140/90. A blood pressure in this range is an absolute indication for anti-hypertensive drug therapy. Provided treatment is well tolerated and the driver demonstrates a BP value of 140/90 or less, he or she may be certified for one year from date of the initial exam. The driver is certified annually thereafter.

A blood pressure at or greater than 180 (systolic) and 110 (diastolic) is considered Stage 3, high risk for an acute BP-related event. The driver may **not** be qualified, even temporarily, until reduced to 140/90 or less and treatment is well tolerated. The driver may be certified for 6 months and biannually (every 6 months) thereafter if at recheck BP is 140/90 or less.

Annual recertification is recommended if the medical examiner does not know the severity of hypertension prior to treatment.

An elevated blood pressure finding should be confirmed by at least two subsequent measurements on different days.

Treatment includes nonpharmacologic and pharmacologic modalities as well as counseling to reduce other risk factors. Most antihypertensive medications also have side effects, the importance of which must be judged on an individual basis. Individuals must be alerted to the hazards of these medications while driving. Side effects of somnolence or syncope are particularly undesirable in commercial drivers.

Secondary hypertension is based on the above stages. Evaluation is warranted if patient is persistently hypertensive on maximal or near-maximal doses of 2-3 pharmacologic agents. Some causes of secondary hypertension may be amenable to surgical intervention or specific pharmacologic disease.
(See Cardiovascular Advisory Panel Guidelines for the Medical Examination of Commercial Motor Vehicle Drivers at:
http://www.fmcsa.dot.gov/rulesregs/medreports.htm)

Rheumatic, Arthritic, Orthopedic, Muscular, Neuromuscular or Vascular Disease §391.41(b)(7)
A person is physically qualified to drive a commercial motor vehicle if that person:
Has no established medical history or clinical diagnosis of rheumatic, arthritic, orthopedic, muscular, neuromuscular or vascular disease which interferes with the ability to control and operate a commercial motor vehicle safely.

Certain diseases are known to have acute episodes of transient muscle weakness, poor muscular coordination (ataxia), abnormal sensations (paresthesia), decreased muscular tone (hypotonia), visual disturbances and pain which may be suddenly incapacitating. With each recurring episode, these symptoms may become more pronounced and remain for longer periods of time. Other diseases have more insidious onsets and display symptoms of muscle wasting (atrophy), swelling and paresthesia which may not suddenly incapacitate a person but may restrict his/her movements and eventually interfere with the ability to safely operate a motor vehicle. In many instances these diseases are degenerative in nature or may result in deterioration of the involved area.

Once the individual has been diagnosed as having a rheumatic, arthritic, orthopedic, muscular, neuromuscular or vascular disease, then he/she has an established history of that disease. The physician, when examining an individual, should consider the following: (1) the nature and severity of the individual's condition (such as sensory loss or loss of strength); (2) the degree of limitation present (such as range of motion); (3) the likelihood of progressive limitation (not always present initially but may manifest itself over time); and (4) the likelihood of sudden incapacitation. If severe functional impairment exists, the driver does not qualify. In cases where more frequent monitoring is required, a certificate for a shorter period of time may be issued. (See Conference on Neurological Disorders and Commercial Drivers at:
http://www.fmcsa.dot.gov/rulesregs/medreports.htm)

Epilepsy
§391.41(b)(8)
A person is physically qualified to drive a commercial motor vehicle if that person:
Has no established medical history or clinical diagnosis of epilepsy or any other condition which is likely to cause loss of consciousness or any loss of ability to control a motor vehicle.

Epilepsy is a chronic functional disease characterized by seizures or episodes that occur without warning, resulting in loss of voluntary control which may lead to loss of consciousness and/or seizures. Therefore, the following drivers cannot be qualified: (1) a driver who has a medical history of epilepsy; (2) a driver who has a current clinical diagnosis of epilepsy; or (3) a driver who is taking antiseizure medication.

If an individual has had a sudden episode of a nonepileptic seizure or loss of consciousness of unknown cause which did not require antiseizure medication, the decision as to whether that person's condition will likely cause loss of consciousness or loss of ability to control a motor vehicle is made on an individual basis by the medical examiner in consultation with the treating physician. Before certification is considered, it is suggested that a 6 month waiting period elapse from the time of the episode. Following the waiting period, it is suggested that the individual have a complete neurological examination. If the results of the examination are negative and antiseizure medication is not required, then the driver may be qualified.

In those individual cases where a driver has a seizure or an episode of loss of consciousness that resulted from a known medical condition (e.g., drug reaction, high temperature, acute infectious disease, dehydration or acute metabolic disturbance), certification should be deferred until the driver has fully recovered from that condition and has no existing residual complications, and not taking antiseizure medication.

Drivers with a history of epilepsy/seizures off antiseizure medication **and** seizure-free for 10 years may be qualified to drive a CMV in interstate commerce. Interstate drivers with a history of a single unprovoked seizure may be qualified to drive a CMV in interstate commerce if seizure-free **and** off antiseizure medication for a 5-year period or more.
(See Conference on Neurological Disorders and Commercial Drivers at:
http://www.fmcsa.dot.gov/rulesregs/medreports.htm)

Mental Disorders
§391.41(b)(9)
A person is physically qualified to drive a commercial motor vehicle if that person:
Has no mental, nervous, organic or functional disease or psychiatric disorder likely to interfere with ability to drive a motor vehicle safely.

Emotional or adjustment problems contribute directly to an individual's level of memory, reasoning, attention, and judgment. These problems often underlie physical disorders. A variety of functional disorders can cause drowsiness, dizziness, confusion, weakness or paralysis that may lead to incoordination, inattention, loss of functional control and susceptibility to accidents while driving. Physical fatigue, headache, impaired coordination, recurring physical ailments and chronic "nagging" pain may be present to such a degree that certification for commercial driving is inadvisable. Somatic and psychosomatic complaints should be thoroughly examined when determining an individual's overall fitness to drive. Disorders of a periodically incapacitating nature, even in the early stages of development, may warrant disqualification.

Many bus and truck drivers have documented that "nervous trouble" related to neurotic, personality, or emotional or adjustment problems is responsible for a significant fraction of their preventable accidents. The degree to which an individual is able to appreciate, evaluate and adequately respond to environmental strain and emotional stress is critical when assessing an individual's mental alertness and flexibility to cope with the stresses of commercial motor vehicle driving.

When examining the driver, it should be kept in mind that individuals who live under chronic emotional upsets may have deeply ingrained maladaptive or erratic behavior patterns. Excessively antagonistic, instinctive, impulsive, openly aggressive, paranoid or severely depressed behavior greatly interfere with the driver's ability to drive safely. Those individuals who are highly susceptible to frequent states of emotional instability (schizophrenia, affective psychoses, paranoia, anxiety or depressive neuroses) may warrant disqualification. Careful consideration should be given to the side effects and interactions of medications in the overall qualification determination. See Psychiatric Conference Report for specific recommendations on the use of medications and potential hazards for driving.
(See Conference on Psychiatric Disorders and Commercial Drivers at:
http://www.fmcsa.dot.gov/rulesregs/medreports.htm)

Vision
§391.41(b)(10)
A person is physically qualified to drive a commercial motor vehicle if that person:
Has distant visual acuity of at least 20/40 (Snellen) in each eye with or without corrective lenses or visual acuity separately corrected to 20/40 (Snellen) or better with corrective lenses, distant binocular acuity of at least 20/40 (Snellen) in both eyes with or without corrective lenses, field of vision of at least 70 degrees in the horizontal meridian in each eye, and the ability to recognize the colors of traffic signals and devices showing standard red, green, and amber.

The term "ability to recognize the colors of" is interpreted to mean if a person can recognize and distinguish among traffic control signals and devices showing standard red, green and amber, he or she meets the minimum standard, even though he or she may have some type of color perception deficiency. If certain color perception tests are administered, (such as Ishihara, Pseudoisochromatic, Yarn) and doubtful findings are discovered, a controlled test using signal red, green and amber may be employed to determine the driver's ability to recognize these colors.

Contact lenses are permissible if there is sufficient evidence to indicate that the driver has good tolerance and is well adapted to their use. Use of a contact lens in one eye for distance visual acuity and another lens in the other eye for near vision is not acceptable, nor telescopic lenses acceptable for the driving of commercial motor vehicles.

If an individual meets the criteria by the use of glasses or contact lenses, the following statement shall appear on the Medical Examiner's Certificate: "Qualified only if wearing corrective lenses."

CMV drivers who do not meet the Federal vision standard may call (202) 366-1790 for an application for a vision exemption.
(See Visual Disorders and Commercial Drivers at:
http://www.fmcsa.dot.gov/rulesregs/medreports.htm)

Hearing
§391.41(b)(11)
A person is physically qualified to drive a commercial motor vehicle if that person:
First perceives a forced whispered voice in the better ear at not less than 5 feet with or without the use of a hearing aid, or, if tested by use of an audiometric device, does not have an average hearing loss in the better ear greater than 40 decibels at 500 Hz, 1,000 Hz, and 2,000 Hz with or without a hearing aid when the audiometric device is calibrated to American National Standard (formerly ADA Standard) Z24.5-1951.

Since the prescribed standard under the FMCSRs is the American Standards Association (ANSI), it may be necessary to convert the audiometric results from the ISO standard to the ANSI standard. Instructions are included on the Medical Examination report form.

If an individual meets the criteria by using a hearing aid, the driver must wear that hearing aid and have it in operation at all times while driving. Also, the driver must be in possession of a spare power source for the hearing aid.

For the whispered voice test, the individual should be stationed at least 5 feet from the examiner with the ear being tested turned toward the examiner. The other ear is covered. Using the breath which remains after a normal expiration, the examiner whispers words or random numbers such as 66, 18,

23, etc. The examiner should not use only sibilants (s sounding materials). The opposite ear should be tested in the same manner. If the individual fails the whispered voice test, the audiometric test should be administered.

If an individual meets the criteria by the use of a hearing aid, the following statement must appear on the Medical Examiner's Certificate "Qualified only when wearing a hearing aid." (See Hearing Disorders and Commercial Motor Vehicle Drivers at: http://www/fmcsa.dot.gov/rulesregs/medreports.htm)

Drug Use
§391.41(b)(12)
A person is physically qualified to drive a commercial motor vehicle if that person does not use any drug or substance identified in 21 CFR 1308.11, an amphetamine, a narcotic, or other habit-forming drug. A driver may use a non-Schedule I drug or substance that is identified in the other Schedules in 21 part 1308 if the substance or drug is prescribed by a licensed medical practitioner who: (A) is familiar with the driver's medical history, and assigned duties; and (B) has advised the driver that the prescribed substance or drug will not adversely affect the driver's ability to safely operate a commercial motor vehicle.

This exception does not apply to methadone. The intent of the medical certification process is to medically evaluate a driver to ensure that the driver has no medical condition which interferes with the safe performance of driving tasks on a public road. If a driver uses an amphetamine, a narcotic or any other habit-forming drug, it may be cause for the driver to be found medically unqualified. If a driver uses a Schedule I drug or substance, it will be cause for the driver to be found medically unqualified. Motor carriers are encouraged to obtain a practitioner's written statement about the effects on transportation safety of the use of a particular drug.

A test for controlled substances is not required as part of this biennial certification process. The FMCSA or the driver's employer should be contacted directly for information on controlled substances and alcohol testing under Part 382 of the FMCSRs.

The term "uses" is designed to encompass instances of prohibited drug use determined by a physician through established medical means. This may or may not involve body fluid testing. If body fluid testing takes place, positive test results should be confirmed by a second test of greater specificity. The term "habit-forming" is intended to include any drug or medication generally recognized as capable of becoming habitual, and which may impair the user's ability to operate a commercial motor vehicle safely.

The driver is medically unqualified for the duration of the prohibited drug(s) use and until a second examination shows the driver is free from the prohibited drug(s) use. Recertification may involve a substance abuse evaluation, the successful completion of a drug rehabilitation program, and a negative drug test result. Additionally, given that the certification period is normally two years, the examiner has the option to certify for a period of less than 2 years if this examiner determines more frequent monitoring is required.
(See Conference on Neurological Disorders and Commercial Drivers and Conference on Psychiatric Disorders and Commercial Drivers at: http://www.fmcsa.dot.gov/rulesregs/medreports.htm)

Alcoholism
§391.41(b)(13)
A person is physically qualified to drive a commercial motor vehicle if that person:
Has no current clinical diagnosis of alcoholism.

The term "current clinical diagnosis of" is specifically designed to encompass a current alcoholic illness or those instances where the individual's physical condition has not fully stabilized, regardless of the time element. If an individual shows signs of having an alcohol-use problem, he or she should be referred to a specialist. After counseling and/or treatment, he or she may be considered for certification.

MEDICAL EXAMINER'S CERTIFICATE

I certify that I have examined _____in accordance with the Federal Motor Carrier Safety Regulations (49 CFR 391.41-391.49) and with knowledge of the driving duties, I find this person is qualified, and, if applicable, only when:

- ☐ **wearing corrective lenses**
- ☐ **wearing hearing aid**
- ☐ **accompanied by a_____waiver/exemption**
- ☐ **driving within an exempt intracity zone (49 CFR 391.62)**
- ☐ **accompanied by a Skill Performance Evaluation Certificate (SPE)**
- ☐ **qualified by operation of 49 CFR 391.64**

The information I have provided regarding this physical examination is true and complete. A complete examination form with any attachment embodies my findings completely and correctly, and is on file in my office.

SIGNATURE OF MEDICAL EXAMINER	TELEPHONE	DATE

MEDICAL EXAMINER'S NAME (PRINT)	☐ MD ☐ DO ☐ Physician Assistant	☐ Chiropractor ☐ Advanced Practice Nurse ☐ Other Practitioner
MEDICAL EXAMINER'S LICENSE OR CERTIFICATE NO./ISSUING STATE	NATIONAL REGISTRY NO.	

SIGNATURE OF DRIVER	INTRASTATE ONLY	CDL	DRIVER'S LICENSE NO.	STATE
	☐ YES ☐ NO	☐ YES ☐ NO		

ADDRESS OF DRIVER

MEDICAL CERTIFICATION EXPIRATION DATE

DRIVER'S ROAD TEST EXAMINATION

Driver's Name_____Phone_____

Driver's Address_____

City_____State_____Zip Code_____

The road test shall be given by the motor carrier or a person designated by it. However, a driver who is a motor carrier must be given the test by another person. The test shall be given by a person who is competent to evaluate and determine whether the person who takes the test has demonstrated that he or she is capable of operating the vehicle and associated equipment that the motor carrier intends to assign.

Rating of Performance

_____ The pretrip inspection. (As required by Sec. 392.7)

_____ Coupling and uncoupling of combination units, if the equipment he or she may drive includes combination units.

_____ Placing the equipment in operation.

_____ Use of vehicle's controls and emergency equipment.

_____ Operating the vehicle in traffic and while passing other vehicles.

_____ Turning the vehicle.

_____ Braking, and slowing the vehicle by means other than braking.

_____ Backing, and parking the vehicle.

_____ Other, Explain: _____

_____

Type of equipment used in giving test: _____

_____

Date_____20_____ Examiner's Signature_____

If the road test is successfully completed, the person who gave it shall complete a certificate of driver's road test.

Remarks_____

_____

CERTIFICATION OF ROAD TEST

Instructions to Carrier: If the road test is successfully completed, the person who gave it must complete the following certification in duplicate. The original of the signed road test form and the original of the Certification of Road Test shall be retained in the driver qualification file of the person who was examined, and duplicate copies provided to the person examined. Section 391.31 (e)(f)(g)(1)(2) of the Federal Motor Carrier Safety Regulations.

This is to certify that the above-named driver was given a road test under my supervision on _____ 19 _____ consisting of approximately _____ miles of driving. It is my considered opinion that this driver possesses sufficient driving skill to operate safely the type of commercial motor vehicle listed above.

_____
(Carrier Name)

_____
(Carrier Address) (City) (State) (Zipcode)

_____ _____
(Name of Examiner) (Signature of Examiner)

VIOLATION AND REVIEW RECORD

Driver's Name Employee Number

CERTIFICATION OF VIOLATIONS

I certify that the following is a true and complete list of all traffic violations (including revocation, suspension or withdrawal of an operator's license, but not parking violations) for which I have been convicted or forfeited bond or collateral during the past 12 months.

DATE	OFFENSE	LOCATION	TYPE OF VEHICLE OPERATED

Operator's License:
(Revoked, Suspended,
or Withdrawn) _____ Date: _____ Restored: _____

License Number: State Date: _____

If no violations are listed above, I certify that I have not been convicted or forfeited bond or collateral, during the past 12 months, because of any violation required to be listed.

_____ _____
Driver's Signature Date

_____ _____
Reviewed by: Signature Title

_____ _____
Motor Carrier's Name Motor Carrier's

REVIEW AND EVALUATION OF DRIVER'S RECORD

In accordance with Section 391.25 of the Federal Motor Carrier Safety Regulations, all information pertinent to the above driver's safety of operations, including the list of violations furnished by him/her in accordance with Section 391.27, has been reviewed for the past 12 months. Actions taken are detailed below (and on the reverse side of this form if additional room was necessary).

_____ _____ _____
Reviewed by: Signature Title Date

(Form 9 – Rev. 10-2001)

MULTIPLE-EMPLOYER DRIVERS

Instructions: If a motor carrier employs a person as a multiple-employer driver (as defined in 49 CFR 390.5), the motor carrier shall comply with all requirements of Part 391, except the carrier need not—

(1) Require the person to furnish an application for employment (391.21);

(2) Make an inquiry into the person's driving record during the preceding three years to the appropriate State agency(s) and an investigation of the person's employment record during the preceding three years (391.23);

(3) Perform annual review of the person's driving record (391.25); or

(4) Require the person to furnish a record of violations or a certificate (391.27).

The checklist below may be helpful to ensure that required documents are obtained.

DRIVER QUALIFICATION FILE CHECKLIST

Name _____

Social Security Number _____

Driver's License Number _____

Type of License _____ State _____

In addition to the above information, copies of the following must be obtained.

- ❑ Medical Examiner's Certificate
- ❑ Road Test (or equivalent)
- ❑ Certificate of Road Test
- ❑ Controlled Substances Test

Entry Level Driver Certificate of Training

I certify that _____ had completed training requirements set forth in the Federal Motor Carrier Safety Regulations for entry-level driver training in accordance with 49 CFR 380.503.

_____	_____
Name of Certifying Official	Signature
Date Certified:	

Driver's Name (First, MI, Last)	
Commercial Drivers License Number	State
Address of Driver (Street address, City, State and Zip Code)	
Name of Training Provider	
Training Provider's Mailing Address	

Longer Combination Vehicle (LCV) Driver-Training Certificate of Grandfathering

I certify that _____ has presented evidence of meeting the prerequisites set forth in the Federal Motor Carrier Safety Regulations (49 CFR 380.111) for the substitute for LCV driver training and is qualified to operate the LCVs indicated below:

YES	NO	
❑	❑	**LCV Doubles**
❑	❑	**LCV Triples**

DRIVER NAME (First name, MI, Last name)	
Commercial Driver's License Number	STATE
ADDRESS OF DRIVER (Street Address, City, State, and Zip Code)	
FULL NAME OF MOTOR CARRIER	Telephone Number
ADDRESS OF PRINCIPAL PLACE OF BUSINESS (Street Address, City, State, and Zip Code)	
SIGNATURE OF MOTOR CARRIER OFFICIAL	DATE ISSUED

Section 4

Driver Operation

(49 CFR, Part 392)

49 CFR, Part 392 contains 7 subparts describing requirements while driving commercial motor vehicles. A brief summary of each of the subparts follows.

SUBPART A -- GENERAL

Applicability: All carriers and their employees must be instructed in and must obey the rules of this part if responsible for:

- Management, maintenance, operation or driving of commercial motor vehicles.
- Hiring, supervising, training, assigning, or dispatching of drivers.

Driving prohibitions: A driver may not drive if he/she:

- Has consumed an alcoholic beverage within 4 hours of going on duty, while on duty, or while driving. A driver is forbidden to possess an alcoholic beverage while on duty, unless it is a manifested part of the shipment.
- Is under the influence of alcohol, schedule I drugs, narcotics or amphetamines (including pep pills and bennies) or any other substance (including prescription or over the counter drugs) causing the driver to drive unsafely.
- Is ill or fatigued to the point that driving or alertness may be impaired, or the illness, fatigue or any other cause makes it unsafe to begin (or continue) to drive the vehicle.

Equipment, inspection and use: No commercial motor vehicle shall be driven unless the driver has satisfied himself/herself that the following parts and accessories are in good working condition:

- Service brakes
- Parking brakes
- Lighting devices and reflectors
- Rear-vision mirror or mirrors
- Horn
- Windshield wipers
- Tires
- Coupling devices
- Emergency equipment
- Steering mechanism

Cargo securement: No person shall drive a commercial motor vehicle and a motor carrier shall not require or permit a person to drive a commercial motor vehicle unless the vehicle's cargo is properly distributed and secured.

SUBPART B – DRIVING

Railroad grade crossings, stopping required: Generally, buses and vehicles transporting hazardous materials must stop at railroad crossings.

After stopping within at least 50 feet of, but not closer than 15 feet of a crossing, the driver may drive the vehicle across the tracks in a gear that permits the vehicle to complete the crossing without a change of gear.

Seat belts: Drivers are required to wear their seat belts when operating the vehicle.

SUBPART C -- STOPPED VEHICLES

Unattended commercial motor vehicles: A vehicle stopped upon a highway or shoulder must activate the vehicle's hazard warning flashers at once. The driver must leave the flashers on until warning devices (triangles, reflectors, flares, etc.) are activated. The flashers must again be used while the warning devices are being picked up before the vehicle moves on.

The parking brake should be set and any other steps taken to keep the vehicle from moving before the driver leaves the vehicle unattended.

Placement of warning devices: After making an emergency stop, the driver must set out emergency warning devices as soon as possible; but in any event, within ten minutes. The warning devices must be placed as follows (except where specific rules apply):

1. One warning device must be placed on the traffic side of the vehicle, within 10 feet of either the front or rear.
2. A second device must be placed facing approaching traffic approximately 100 feet away in the center of the lane or shoulder where the vehicle is stopped.
3. The third device must be placed about 100 feet away from the others, in the opposite direction from the stopped vehicle, and also one in the center of the lane or shoulder.

Fuses: Flame-producing devices may not be used when certain types of hazardous material are being transported.

SUBPART D -- USE OF LIGHTED LAMPS AND REFLECTORS

Lights and reflectors are to be clean and not hidden by cargo, tail board, or other obstructions.

SUBPART F -- FUELING PRECAUTIONS

- A driver or employee may not smoke or expose any open flame near a vehicle being fueled.
- Extra fuel shall be carried only in properly mounted tanks.
- The number of times buses are fueled while carrying passengers shall be minimized.

SUBPART G -- PROHIBITED PRACTICES

Unauthorized persons prohibited: Generally, written permission from the carrier is necessary for
passengers to ride in a vehicle.

Towing buses: No loaded bus shall be towed or pushed.

Carbon monoxide: No person shall dispatch or drive any commercial motor vehicle or permit any
passengers thereon, if:

- An occupant has been affected by carbon monoxide.
- Carbon monoxide has been detected in the interior of the commercial motor vehicle.
- Mechanical condition has been discovered which would be likely to produce a hazard to occupants.

Radar detectors: Federal Motor Carrier Safety Regulations prohibit use of radar detectors, including the following:

- A driver of a commercial vehicle shall not use radar detectors.
- A driver shall not operate any commercial motor vehicle that is equipped with a radar detector.
- Motor carriers shall not require or permit a driver to violate the radar detector provisions.

Cellphone/Texting: Driver is prohibited from using a cellphone or texting while operating a motor vehicle.

NOTE: This publication not intended for sale.

Section 5

Insurance Requirements

MINIMUM LEVELS OF FINANCIAL RESPONSIBILITY FOR MOTOR CARRIERS, AUTO TRANSPORTATION COMPANIES (AIRPORTERS and BUSES), PASSENGER CHARTER CARRIERS, AND SOLID WASTE COLLECTION COMPANIES.

Motor carriers of property, for-hire carriers of passengers, and solid waste collection companies must have a minimum amount of liability and property damage insurance.

- A motor carrier is required to have an insurance company file evidence of liability and property damage insurance with the Washington Utilities & Transportation Commission (UTC). The insurance filed must be written by a company authorized to write such insurance in the state of Washington.
- Failure to file and keep insurance in full force and effect shall be cause for dismissal of an application or cancellation of a permit.
- Evidence of insurance shall be submitted on a uniform motor carrier bodily injury and property damage liability certificate of insurance (Form E).

An instruction sheet and example of forms are provided on the following pages of this manual.

MINIMUM LEVELS OF FINANCIAL RESPONSIBILITY FOR MOTOR CARRIERS AND PASSENGER CARRIERS OPERATING IN INTERSTATE COMMERCE.

Those motor carriers of property operating commercial motor vehicles in interstate or foreign commerce must have a minimum amount of insurance as prescribed in 49 CFR, Part 387. Motor carriers operating in interstate commerce must have proof of the minimum level of insurance at the company's principal place of business.

Private carriers operating in Washington intrastate commerce are not required to file insurance with the Washington Utilities and Transportation Commission. They must comply with insurance limit requirements contained in Title 46 RCW.

Proof of insurance for interstate carriers can be any of the following:

- Endorsement(s) for Motor Carrier Policies of Insurance for Public Liability under Sections 29 and 30 of the Motor Carrier Act of 1980 (Form MCS-90) issued by an insurer(s).
- Endorsement(s) for Motor Carrier Policies of Insurance for Public Liability Under Section 18 of the Bus Regulatory Reform Act of 1982 (Form MCS-90B) issued by an insurer(s).
- A Motor Carrier Surety Bond for Public Liability Under Sections 29 and 30 of the Motor Carrier Act of 1980 (Form MCS-82) issued by a surety.
- A Motor Carrier Public Liability Surety Bond Under Section 18 of the Bus Regulatory Reform Act of 1982 (Form MCS 82B) issued by a surety.
- A written decision, order, or authorization of the Interstate Commerce Commission authorizing the motor carrier to self-insure under 49 CFR, Part 1043.5.
- BMC 91X public liability insurance form.

See following chart regarding Schedule of Limits for minimum levels of financial responsibility.

WASHINGTON UTC UTILITIES AND TRANSPORTATION COMMISSION

Licensing Services
360-664-1222

Consumer Help Line
888-333-WUTC (9882)
consumer@utc.wa.gov

TTY
800-416-5289

Education and Outreach
360-664-1110

Media Line
360-664-1116

The UTC regulates the services of privately or investor owned utility and transportation companies. Our mission is to ensure that services are fairly priced, available, reliable and safe.

Regulated companies:
- Telephone
- Electricity
- Natural Gas
- Water
- Garbage
- Recycling
- Residential Movers
- Charter Buses
- Airport Shuttles
- Commercial Ferries
- Natural Gas Pipeline

General Information
360-664-1160
www.utc.wa.gov

PO Box 47250
1300 S Evergreen Pk Dr SW
Olympia WA 98504

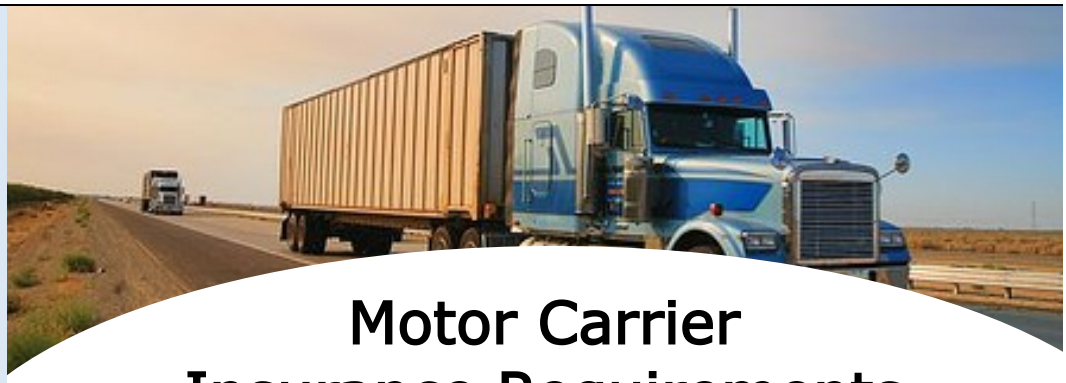

Motor Carrier Insurance Requirements

If you want to operate as a common carrier, household goods mover, solid waste company, or passenger carrier in the state of Washington you must have a permit or certificate from the Utilities and Transportation Commission (commission) and valid insurance. To apply for a permit or certificate, you must provide proof of liability and property damage insurance. You must also maintain proof of insurance to keep your permit or certificate active.

Form E or Form G - Liability and Property Damage Insurance

Your insurance company must file Form E, Uniform Motor Carrier Bodily Injury and Property Damage Liability Certificate of Insurance. Form E is the standard proof of insurance form issued by insurance companies. You may also file a Form G, Surety Bond, as proof of insurance.

Certificate of Insurance or Binder

We will accept an insurance certificate or binder from your insurance company for a period of **up to 60 days**, but it must be replaced by a Form E **before the 60 days expires**. Insurance certificates or binders must show the UTC as the certificate holder.

Cancellations

Insurance companies must notify the UTC thirty (30) days before your insurance policy expires. If your policy expires, the UTC will suspend your permit or certificate for 30 days. If you do not submit proof of insurance within the 30 days, your permit or certificate will be cancelled. UTC staff will send a letter to notify you if we intend to suspend or cancel your permit or certificate. Prior to canceling your permit or certificate, we will offer you an opportunity for a hearing to explain why we should not cancel your permit or certificate.

Motor Carrier Insurance

Specific requirements for all insurance forms

The UTC will reject insurance forms that do not meet these requirements, which means you will not have valid proof of insurance on file.

- The name on the insurance form **MUST MATCH EXACTLY** the individual, partners, or corporate name on your application for a permit or certificate. It may include a d/b/a or trade name.

- Insurance forms must be received from an insurance company authorized to write insurance in the state of Washington. You may check with the Office of the Insurance Commissioner to determine if your insurance company is authorized in Washington.

- All insurance forms must include:
  The policy number.
  The name of the insurance company.
  The signature of the insurance company's authorized representative.
  An issue date and effective date.

Cargo Insurance

If you are a household goods carrier, you must maintain proof of cargo insurance at your place of business. For vehicles with a gross vehicle weight of less than 10,000 pounds, you must have $10,000 minimum levels of cargo insurance. For vehicles 10,000 pounds or more, you must have $20,000 minimum levels.

For More Information

Licensing Services
(360) 664-1222

Consumer Help Line
888-333-WUTC (9882)
consumer@utc.wa.gov

TTY
800-416-5289

Media Line
360-664-1116

REQUIRED INSURANCE FILING

CARRIERS WITH THIS PERMIT	FOR THESE OPERATIONS OR VEHICLE USAGE	MUST FILE ONE OF THE FOLLOWING FORMS	AT THESE MINIMUM INSURANCE LEVELS
Common Carrier Household Goods	Vehicles under 10,000 GVWR hauling non-hazardous property.	Form E Certificate of Insurance. Form G, Surety Bond. Insurance Binder, good for only 60 days.	$300,000 Combined Single Limit (CSL)
Common Carrier Household Goods	Vehicles 10,000 GVWR or more hauling non-hazardous property.	Form E Certificate of Insurance. Form G, Surety Bond. Insurance Binder, good for only 60 days.	$750,000 CSL
Household Goods	Vehicles under 10,000 GVR	Cargo Form H	$10,000
Household Goods	Vehicles over 10,000 GVR	Cargo Form H	$20,000
Common Carrier	Vehicles 10,000 GVWR or more hauling: Oil (49 CFR 172.101). Hazardous waste, hazardous materials, and hazardous substances listed in 49 CFR 172.101, but not listed in paragraph above.	Form E Certificate of Insurance. \ Form G, Surety Bond. Insurance Binder, good for only 60 days.	$1,000,000 CSL
Common Carrier	Any vehicle hauling: Hazardous substances in bulk, in vehicles with capacities exceeding 3,500 water gallons Explosives A or B in any quantity Poison gas in any quantity Liquefied compressed gas or compressed gas, in bulk in containers exceeding 3,500 water gallons Highway route controlled quantity radio-active materials	Form E Certificate of Insurance. Form G, Surety Bond. Insurance Binder, good for only 60 days.	$5,000,000 CSL

WASHINGTON UTC UTILITIES AND TRANSPORTATION COMMISSION

www.utc.wa.gov

REQUIRED INSURANCE FILING

CARRIERS WITH THIS PERMIT	FOR THESE OPERATIONS OR VEHICLE USAGE	MUST FILE ONE OF THE FOLLOWING FORMS	AND OBTAIN THESE MINIMUM INSURANCE LEVELS
Solid Waste Collection Companies	Solid waste collection vehicles under 10,000 GVWR.	Form E Certificate of Insurance. Form G, Surety Bond. Insurance Binder, good for only 60 days.	$300,000 CSL
Solid Waste Collection Companies	Solid waste collection vehicles 10,000 GVWR or more.	Form E Certificate of Insurance. Form G, Surety Bond. Insurance Binder, good for only 60 days.	$750,000 CSL
Solid Waste Collection Companies	Solid waste collection vehicles that transport quantities of biomedical waste not subject to federal regulation.	Form E Certificate of Insurance. Form G, Surety Bond. Insurance Binder, good for only 60 days.	$1,000,000 CSL
Passenger carriers	Vehicles with a seating capacity of 15 passengers or less, including the driver.	Form E Certificate of Insurance. Form G, Surety Bond. Insurance Binder, good for only 60 days.	$1,500,000 CSL
Passenger carriers	Vehicles with a seating capacity of 16 passengers or more, including the driver.	Form E Certificate of Insurance. Form G, Surety Bond. Insurance Binder, good for only 60 days.	$5,000,000 CSL
Non-profit Special Needs	Vehicles with a seating capacity of 15 passengers or less, including the driver.	Form E Certificate of Insurance. Form G, Surety Bond. Insurance Binder, good for only 60 days.	$500,000 CSL
Non-profit Special Needs	Vehicles with a seating capacity of 16 passengers or more, including the driver.	Form E Certificate of Insurance. Form G, Surety Bond. Insurance Binder, good for only 60 days.	$1,000,000 CSL

Form E

UNIFORM MOTOR CARRIER BODILY INJURY AND PROPERTY

DAMAGE LIABILITY CERTIFICATE OF INSURANCE

Copy

(Executed in Triplicate)

Filed with _____ (hereinafter called Commission)

(Name of Commission)

This is to certify that the _____

(Name of Company)

(hereinafter called Company) of _____

(Home Address of Company)

has issued to _____ of _____

(Name of Motor Carrier) (Address of Motor Carrier)

a policy or policies of insurance effective from _____12:01 A.M. standard time at the address of the insured stated in said policy or policies and continuing until canceled as provided herein, which, by attachment of the Uniform Motor Carrier Bodily Injury and Property Damage Liability Insurance Endorsement, has or have been amended to provide automobile bodily injury and property damage liability insurance covering the obligations imposed upon such motor carrier by the provisions of the motor carrier law of the State in which the Commission has jurisdiction or regulations promulgated in accordance therewith.

Whenever requested, the Company agrees to furnish the Commission a duplicate original of said policy or policies and all endorsements thereon.

This certificate and the endorsement described herein may not be canceled without cancellation of the policy to which it is attached. Such cancellation may be effected by the Company or the insured giving thirty (30) days' notice in writing to the State Commission, such thirty (30) days' notice to commence and run from the date notice is actually received in the office of the Commission.

Countersigned at _____

this _____day of _____ 20_____

_____

Authorized Company Representative

Insurance Company File No. _____

OMB NO:2126-0008
Expiration Date:03/31/2013

Public Burden Statement

A Federal Agency may not conduct or sponsor, and a person is not required to respond to, nor shall a person be subject to a penalty for failure to comply with a collection of information subject to the requirements of the Paperwork Reduction Act unless that collection of information displays a current valid OMB Control Number. The OMB Control Number for this information collection is 2126-0008. Public reporting for this collection of information is estimated to be approximately 2 minutes per response, including the time for reviewing instructions, gathering the data needed, and completing and reviewing the collection of information. All responses to this collection of information are mandatory. Send comments regarding this burden estimate or any other aspect of this collection of information, including suggestions for reducing this burden to: Information Collection Clearance Officer, Federal Motor Carrier Safety Administration, MC-RRA, Washington, D.C. 20590.

U. S. Department of Transportation
Federal Motor Carrier Safety Administration

MOTOR CARRIER PUBLIC LIABILITY SURETY BOND
UNDER SECTIONS 29 AND 30 OF THE MOTOR CARRIER ACT OF 1980

PARTIES

Surety Company and Principal Place of Business Address	Motor Carrier Principal, FMCSA Docket No., And Principal Place of Business Address

PURPOSE This is an agreement between the Surety and the Principal under which the Surety, its successors and assignees, agree to be responsible for the payment of any final judgment or judgments against the Principal for public liability, property damage, and environmental restoration liability claims in the sums prescribed herein; subject to the governing provisions and the following conditions.

GOVERNING PROVISIONS
(1) Sections 29 and 30 of the Motor Carrier Act of 1980 (49 U.S.C. 13906).
(2) Rules and regulations of the Federal Motor Carrier Safety Administration (FMCSA).

CONDITIONS The Principal is or intends to become a motor carrier of property subject to the applicable governing provisions relating to financial responsibility for the protection of the public.

This bond assures compliance by the Principal with the applicable governing provisions, and shall insure to the benefit of any person or persons who shall recover a final judgment or judgments against the Principal for public liability, property damage, or environmental restoration liability claims (excluding injury to or death of the Principal's employees while engaged in the course of their employment, and loss of or damage to property of the principal, and the cargo transported by the Principal). If every final judgment shall be paid for such claims resulting from the negligent operation, maintenance, or use of motor vehicles in transportation subject to the applicable governing provisions, then this obligation shall be void, otherwise it will remain in full effect.

Within the limits described herein, the Surety extends to such losses regardless of whether such motor vehicles are specifically described herein and whether occurring on the route or in the territory authorized to be served by the Principal or elsewhere.

The liability of the Surety on each motor vehicle subject to the financial responsibility requirements of Section's 29 and 30 of the Motor Carrier Act of 1980 for each accident shall not exceed $ _____, and shall be a continuing one notwithstanding any recovery hereunder.

The surety agrees, upon telephone request by an authorized representative of the FMCSA, to verify that the surety bond is in force as of a particular date. The telephone number to call is _____.

This bond is effective from _____(12:01 a.m., standard time, at the address of the Principal as stated herein) and shall continue in force until terminated as described herein. The principal or the Surety may at any time terminate this bond by giving (1) thirty-five (35) days notice in writing to the other party (said 35 day notice to commence from the date the notice is mailed, proof of mailing shall be sufficient proof of notice), and (2) if the Principal is subject to the FMCSA's registration requirements, by providing thirty (30) days notice to the FMCSA (said 30 days notice to commence from the date notice is received by the FMCSA at its office in Washington, D.C.). The Surety shall not be liable for the payment of any judgment or judgments against the Principal for public liability, property damage, or environmental restoration claims resulting from accidents which occur after the termination of this bond as described herein, but such termination shall not affect the liability of the Surety for the payment of any such judgment or judgments resulting from accidents which occur during the time the bond is in effect.

_____
Date

(AFFIX CORPORATE SEAL)

_____
Surety

_____ _____
City State

By _____

ACKNOWLEDGEMENT OF SURETY

STATE OF _____ COUNTY OF _____

On this _____ day of _____, 20_____, before me personally came _____, who, being by me duly sworn, did depose and say the he resides in _____; that he/she is _____of the _____, the corporation described in and which executed the foregoing instrument; that he knows the seal of said corporation; that the seal affixed to said instrument is such corporate seal; that it was so affixed by order of the board of directors of said corporation; that he/she signed his/her name thereto by like order, and he/she duly acknowledged to me that he/she executed the same for and on behalf of the said corporation.

_____

_____
Title of official administering oath

(OFFICIAL SEAL)
*Surety Company File No.*_____

Form MCS-82

Public Burden Statement

OMB NO: 2126-0008
Expiration Date:

A Federal Agency may not conduct or sponsor, and a person is not required to respond to, nor shall a person be subject to a penalty for failure to comply with a collection of information subject to the requirements of the Paperwork Reduction Act unless that collection of information displays a current valid OMB Control Number. The OMB Control Number for this information collection is 2126-0008. Public reporting for this collection of information is estimated to be approximately 2 minutes per response, including the time for reviewing instructions, gathering the data needed, and completing and reviewing the collection of information. All responses to this collection of information are mandatory. Send comments regarding this burden estimate or any other aspect of this collection of information, including suggestions for reducing this burden to: Information Collection Clearance Officer, Federal Motor Carrier Safety Administration, MC-MMI, Washington, D.C. 20590.

U.S. Department of Transportation

Federal Motor Carrier Safety Administration

MOTOR CARRIER PUBLIC LIABILITY SURETY BOND UNDER SECTION 18 OF THE BUS REGULATORY REFORM ACT OF 1982

PARTIES

Surety Company and Principal Place of Business Address	Motor Carrier Principal, FMCSA Docket No., And Principal Place of Business Address
_____	_____
_____	_____
_____	_____
_____	_____

PURPOSE This is an agreement between the Surety and the Principal under which the Surety, its successors and assignees, agree to be responsible for the payment of any final judgment or judgments against the Principal for public liability and property damage claims in the sums prescribed herein, subject to the governing provisions and following conditions.

GOVERNING PROVISIONS
(1) Section 18 of the Bus Regulatory Reform Act of 1982
(2) Rules and regulations of the Federal Motor Carrier Safety Administration (FMCSA)

CONDITIONS The Principal is or intends to become a motor carrier of passengers subject to the applicable governing provisions relating to financial responsibility for the protection of the public.

This bond assures ensures compliance by the Principal with the applicable governing provisions, and shall inure to the benefit of any person or persons who shall recover a final judgment or judgments against the Principal for public liability or property damage claims (excluding injury to or death of the Principal's employees while engaged in the course of their employment, and loss of or damage to property of the Principal, and the cargo transported by the Principal). If every final judgment shall be paid for such claims resulting from the negligent operation, maintenance, or use of motor vehicles in transportation subject to the applicable governing provisions, then this obligation shall be void, otherwise it will remain in full effect.

Within the limits described herein, the Surety extends to such losses regardless of whether such motor vehicles are specifically described herein and whether occurring on the route or in the territory authorized to be served by the Principal or elsewhere.

The liability of the Surety for each motor vehicle subject to the applicable governing provisions for each accident shall not exceed $_____, and shall be a continuing one notwithstanding any recovery thereunder.

The surety agrees, upon telephone request by an authorized representative of the FMCSA, to verify that the surety bond is in force as of a particular date. The telephone number to call is _____.

This bond is effective from _____ (12:01 a.m., standard time, at the address of the Principal as stated herein) and shall continue in force until terminated as described herein. The Principal or the Surety may at any time terminate this bond by giving (1) thirty-five (35) days notice in writing to the other party (said 35 days notice to commence from the date the notice is mailed, proof of mailing shall be sufficient proof of notice), and (2) if the Principal is subject to the FMCSA's registration requirements, by providing thirty (30) days notice to the FMCSA (said 30 days notice to commence from the date notice is received by the FMCSA at its office in Washington, D.C.). The Surety shall not be liable for the payment of any judgment or judgments against the Principal for public liability or property damage claims resulting from accidents which occur after the termination of this bond as described herein, but such termination shall not affect the liability of the Surety from the payment of any such judgment or judgments resulting from accidents which occur during the time the bond is in effect.

_____
Date

(AFFIX CORPORATE SEAL)

_____
Surety

_____ _____
City *State*

By _____

ACKNOWLEDGMENT OF SURETY

STATE OF _____ COUNTY OF _____

On this _____ day of _____, 20___, before me personally came _____, who, being by me duly sworn, did depose and say that he resides in _____; that he/she is _____ of the _____, the corporation described in and which executed the foregoing instrument; that he knows the seal of said corporation; that the seal affixed to said instrument is such corporate seal; that it was so affixed by order of the board of directors of said corporation; that he signed his name thereto by like order, and he duly acknowledged to me that he executed the same for and on behalf of said corporation.

_____

_____
Title of official administering oath

(OFFICIAL SEAL)

Surety Company File No. _____

Form MCS-82B

According to the Paperwork Reduction Act of 1995, no persons are required to respond to a collection of information unless it displays a valid OMB control number. It is estimated that an average of 10 minutes per response is required to complete this collection of information. This estimate includes time for reviewing instructions, searching existing data sources, gathering and maintaining the data needed, and completing and reviewing the collection of information. Comments concerning the accuracy of this burden estimate or suggestions for reducing this burden should be directed to the Federal Motor Carrier Safety Administration, 400 7th St., SW, Washington, DC 20590

Form BMC-90

Approved by OMB
2126-0017
Expires: 02/28/2009

ENDORSEMENT FOR MOTOR CARRIER POLICIES OF INSURANCE FOR AUTOMOBILE BODILY INJURY AND PROPERTY DAMAGE LIABILITY UNDER SECTION 13906, TITLE 49 OF THE UNITED STATES CODE

The policy to which this endorsement is attached is an automobile bodily injury and property damage liability policy and is amended to assure compliance by the insured as a motor carrier of passengers or property, with Section 13906, Title 49 of the United States Code and the pertinent rules and regulations of the Federal Motor Carrier Safety Administration.

In consideration of the premium stated in the policy to which this endorsement is attached, the Company agrees to pay, within the limits of liability prescribed herein, any final judgment recovered against the insured for bodily injury to or death of any person, or loss of or damage to property of others (excluding injury to or death of the insured's employees while engaged in the course of their employment, and property transported by the insured, designated as cargo), resulting from negligence in the operation, maintenance, or use of motor vehicles under certificate or permit issued to the insured by the Federal Motor Carrier Safety Administration, or otherwise in interstate or foreign commerce subject to Chapter 139 of Title 49 of the United States Code, regardless of whether or not such motor vehicles are specifically described in the policy and whether or not such negligence occurs on any route or in any territory authorized by the Federal Motor Carrier Safety Administration to be served by the insured or elsewhere.

It is understood and agreed that no condition, provision, stipulation, or limitation contained in the policy, or any other endorsement thereon or violation thereof, or of this endorsement, by the insured, shall relieve the Company from liability or from the payment of any final judgment, irrespective of the financial responsibility or lack thereof or insolvency or bankruptcy of the insured. However, all terms, conditions, and limitations in the policy to which this endorsement is attached are to remain in full force and effect as binding between the insured and the Company, and the insured agrees to reimburse the Company for any payment made by the Company on account of any accident, claim, or suit involving a breach of the terms of the policy, and for any payment that the Company would not have been obligated to make under the provisions of the policy except for the agreement contained in this endorsement.

It is understood and agreed that, upon failure of the Company to pay any final judgment recovered against the insured as prescribed herein, the judgment creditor may maintain an action in any court of competent jurisdiction against the Company to compel such payment.

The Company's liability for the amounts provided in this endorsement apply separately to each accident and any payment under the policy because of any one accident shall not operate to reduce the liability of the Company for the payment of final judgments resulting from any other accident.

The liability of the Company on each motor vehicle shall be the limits prescribed in 49 CFR 387.303(b)(1), governing minimum amounts of insurance.

This endorsement may not be canceled without notification to the Federal Motor Carrier Safety Administration. Such cancellation may be effected by the Company or the insured giving thirty (30) days notice in writing to the Federal Motor Carrier Safety Administration at its office in Washington, D.C., said thirty (30) days notice commencing from the date notice is received by the FMCSA.

Issued to:_____ of _____

Dated at _____ this _____ day of _____, _____

Amending Policy No. _____ Effective Date _____

Name of Insurance Company _____

Countersigned by _____
Authorized Company Representative

UNIFORM **MC 1651f** (2-06)

SAMPLE

OMB NO: 2126-0008
Expiration Date: 03/31/2013

Public Burden Statement

A Federal Agency may not conduct or sponsor, and a person is not required to respond to, nor shall a person be subject to a penalty for failure to comply with a collection of information subject to the requirements of the Paperwork Reduction Act unless that collection of information displays a current valid OMB Control Number. The OMB Control Number for this information collection is 2126-0008. Public reporting for this collection of information is estimated to be approximately 2 minutes per response, including the time for reviewing instructions, gathering the data needed, and completing and reviewing the collection of information. All responses to this collection of information are mandatory. Send comments regarding this burden estimate or any other aspect of this collection of information, including suggestions for reducing this burden to: Information Collection Clearance Officer, Federal Motor Carrier Safety Administration, MC-RRA, Washington, D.C. 20590.

U.S. Department of Transportation
Federal Motor Carrier
Safety Administration

ENDORSEMENT FOR
MOTOR CARRIER POLICIES OF INSURANCE FOR PUBLIC LIABILITY
UNDER SECTION 18 OF THE BUS REGULATIORY REFORM ACT OF 1982

Issued to _____ of _____

Dated at _____ this _____ day of _____, 20_____

Amending Policy No _____ Effective Date _____

Name of Insurance Company _____

Countersigned by _____
Authorized Company Representative

The policy to which this endorsement is attached provides primary or excess insurance, as indicated by "[X]," for the limits shown:

[ ] This insurance is primary and the company shall not be liable for amounts in excess of $_____ for each accident.

[ ] This insurance is excess and the company shall not be liable for amounts in excess of $_____ for each accident in excess of the underlying limit of $ _____for each accident.

Whenever required by the Federal Motor Carrier Safety Administration (FMCSA), the company agrees to furnish the FMCSA a duplicate of said policy and all its endorsements. The company also agrees, upon telephone request by an authorized representative of the FMCSA, to verify that the policy is in force as of a particular date. The telephone number to call is: _____.

Cancellation of this endorsement may be effected by the company or the insured by giving (1) thirty-five (35) days notice in writing to the other party (said 35 days notice to commence from the date the notice is mailed, proof of mailing shall be sufficient proof of notice), and (2) if the insured is subject to the FMCSA's registration requirements, by providing thirty (30) days notice to the FMCSA (said 30 days notice to commence from the date the notice is received by the FMCSA at its office in Washington, D.C.).

DEFINITIONS AS USED IN THIS ENDORSEMENT

Accident includes continuous or repeated exposure to conditions which results in Public Liability which the insured neither expected nor intended.
Bodily Injury means injury to the body, sickness, or disease to any person, including death resulting from any of these.
Motor Vehicle means a for-hire carrier of passengers by motor vehicle.
Property Damage means damage to or loss of use of tangible property.
Public Liability means liability for bodily injury, property damage.

The insurance policy to which this endorsement is attached provides automobile liability insurance and is amended to assure compliance by the insured, within the limits stated herein, as a for-hire motor carrier of passengers with Section 18 of the Bus Regulatory Reform Act of 1982 and the rules and regulations of the Federal Motor Carrier Safety Administration.

In consideration of the premium stated in the policy to which this endorsement is attached, the insurer (the company) agrees to pay, within the limits of liability described herein, any final judgment received against the insured for public liability resulting from negligence in the operation, maintenance or use of motor vehicles subject to the financial responsibility requirements of Sections 18 of the Bus Regulatory Reform Act of 1982 regardless of whether or not each motor vehicle is specifically described in the policy and whether or not such negligence occurs on any route or in any territory authorized to be served by the insured or elsewhere. Such insurance as is afforded, for public liability, does not apply to injury to or death of the insured's employees while engaged in the course of their employment, or property transported by the insured, designated as cargo. It is understood and agreed that no condition, provision, stipulation, or limitation contained in the policy, this endorsement, or any other endorsement thereon, or violation thereof, shall relieve the company from liability or from the payment of any final judgment, within the limits of liability herein described, irrespective of the financial condition, insolvency or bankruptcy of the insured.

However, all terms, conditions, and limitations in the policy to which the endorsement is attached shall remain in full force and effect as binding between the insured and the company. The insured agrees to reimburse the company for any payment made by the company on account of any accident, claim, or suit involving a breach of the terms of the policy, and for any payment that the company would not have been obligated to make under the provisions of the policy except for the agreement contained in this endorsement.

It is further understood and agreed that, upon failure of the company to pay any final judgment recovered again the insured as provided herein, the judgment creditor may maintain an action in any court of competent jurisdiction against the company to compel such payment.

The limits of the company's liability for the amounts prescribed in this endorsement apply separately to each accident and any payment under the policy because of any one accident shall not operate to reduce the liability of the company for the payment of final judgments resulting from any other accident.

The Bus Regulatory Reform Act 1982 requires limits of financial responsibility according to vehicle seating capacity, it is the MOTOR CARRIER'S obligation to obtain the required limits of financial responsibility. THE SCHEDULE OF LIMITS SHOWN ON THE REVERSE SIDE DOES NOT PROVIDE COVERAGE. The limits shown in the schedule are for information purposes only.

Form MCS-90B (page 1 of 2)

SCHEDULE OF LIMITS--*PUBLIC LIABILITY*
For-hire motor carriers of passengers operating in interstate or foreign commerce

Vehicle Seating Capacity	Effective Dates	
	Nov. 19, 1983	Nov. 19, 1985
(1) Any vehicle with a seating capacity of 16 passengers or more.	$2,500,000	$5,000,000
(2) Any vehicle with a seating capacity of 15 passengers or less.	$ 750,000	$1,500,000

Form MCS-90B (page 2 of 2)

Section 6

Parts And Accessories Necessary For Safe Operation

(49 CFR, Part 393)

Every motor carrier, its officers, agents, drivers, representatives, and employees involved with the inspection and/or maintenance of equipment must understand and obey the rules of part 393. A carrier cannot operate a commercial motor vehicle unless it is properly equipped.

Parts and accessories shall be in safe and proper operating conditions at all times.

Specific equipment requirements are contained in the following subparts of 49 CFR, Part 393:

SUBPART B -	Lighting devices, reflectors and electrical equipment.
SUBPART C -	Brakes.
SUBPART D -	Glazing and window construction.
SUBPART E -	Fuel systems.
SUBPART F -	Coupling devices and towing methods.
SUBPART G -	Miscellaneous parts and accessories.
SUBPART H -	Emergency equipment.
SUBPART I -	Protection against shifting or falling cargo.
SUBPART J -	Frames, cab and body components, wheels, steering, and suspension systems.
49 CFR 393.89	All passenger-carrying vehicles must comply with this rule per training to drive shaft protection.
RCW 46.37.400	Requires additional mirrors and back-up devices on certain vehicles. You should review this rule to see if it applies to your vehicles.

Note: This publication not intended for sale.

CONFIGURATION REQUIRMENTS
(After 1-26-98)

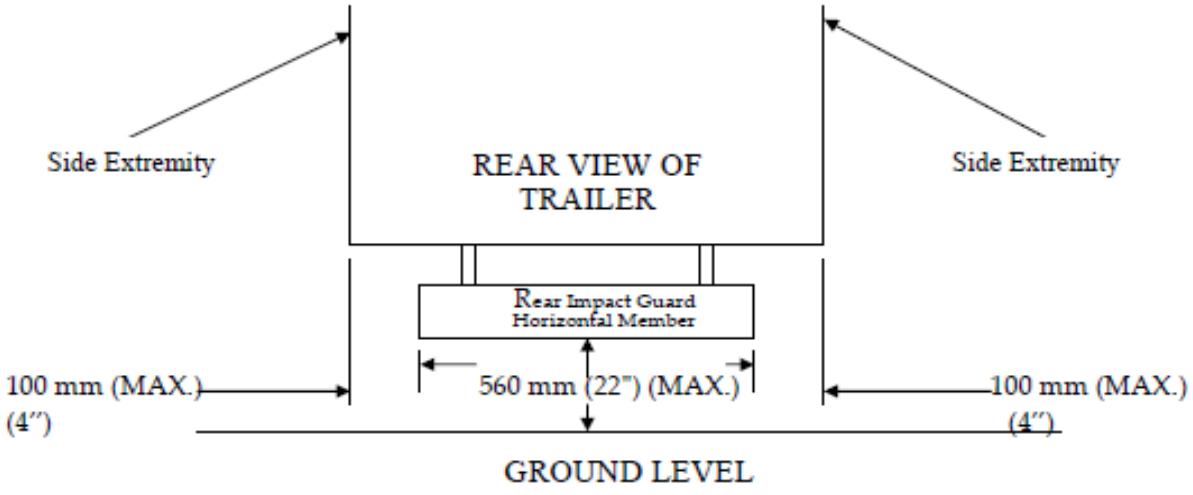

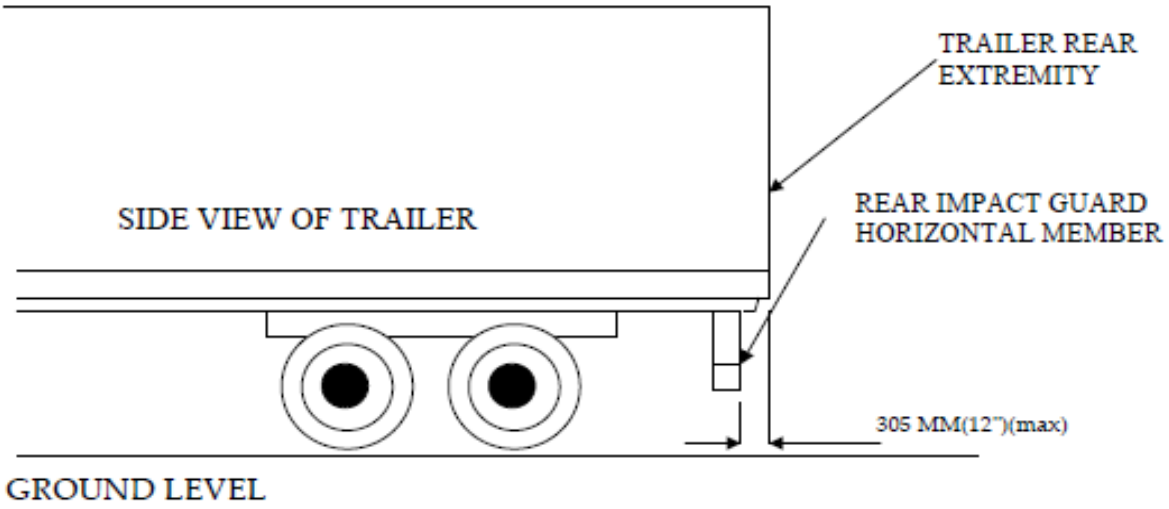

Parts and Accessories Necessary for Safe Operation (49 CFR, Part 393)

REAR END PROTECTION
49 CFR 393.86
(Before 1-26-98)

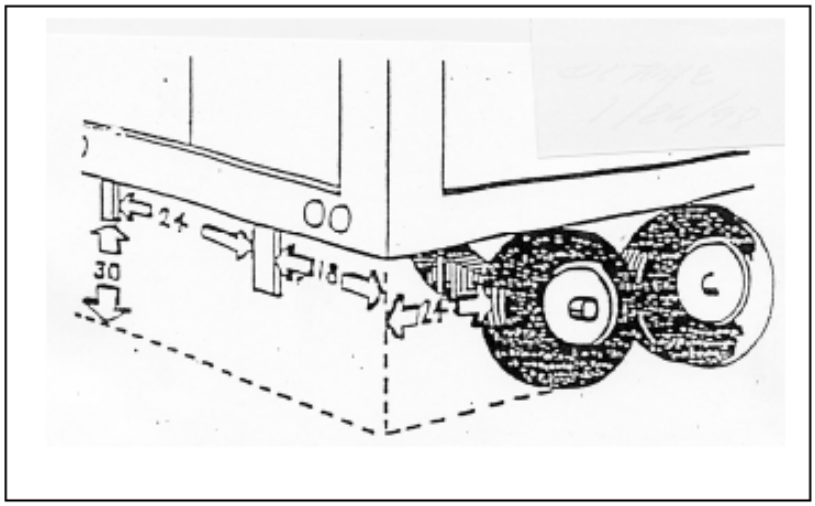

- Body/Chassis
  - More than 30" above ground
  - Empty
- Bumpers or Similar Device
  - Not exceed 30" from ground
  - Not exceed 24" between
  - Not exceed 18" from side
  - Not exceed 24" from rear
- Substantially Constructed
- Firmly Attached

REFLECTIVE TAPE FOR TRAILERS

On March 31, 1999, the Federal DOT issued a rule which requires trailers over 10,000 lbs. and 80 inches wide or more to be retrofitted with reflective tape (Ref. 393.13).

Trailers built on or after December 1, 1993, must already have reflective tape when built; that tape must be maintained in the same manner as when the trailer was new.

Trailers built before December 1, 1993, must be retrofitted with tape meeting the same color and reflection requirements.

White 12" inverted "L" along the top rear (with modifications for flat-beds and tankers).

Alternating red and white on lower rear and along the sides evenly spaced and covering at least half the length of the trailer:

- 14 feet on a 28-foot trailer
- 20 feet on a 40-foot trailer
- 24 feet on a 48-foot trailer
- 26½ feet on a 53-foot trailer

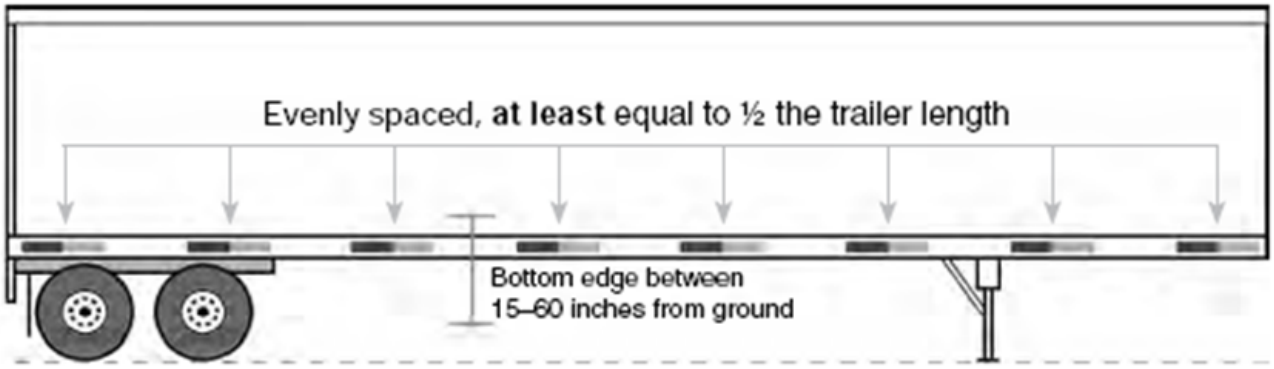

For box trailers, the rear reflective tape must be as shown:

- Full-width across the rear-end protection ("ICC bumper")
- Full-width across the lower rear cargo area
- Two 12" inverted "L" near the top rear corners

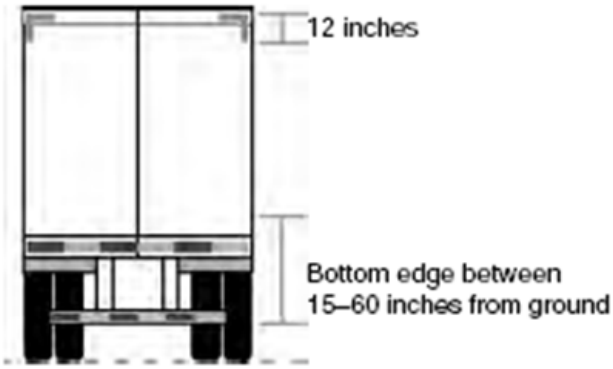

For flat-bed trailers, the rear tape must be has shown:

- Full-width across the rear-end protection ("ICC bumper")
- Full-width across the lower rear cargo area
- Two 12" inverted "L" near the top rear header board

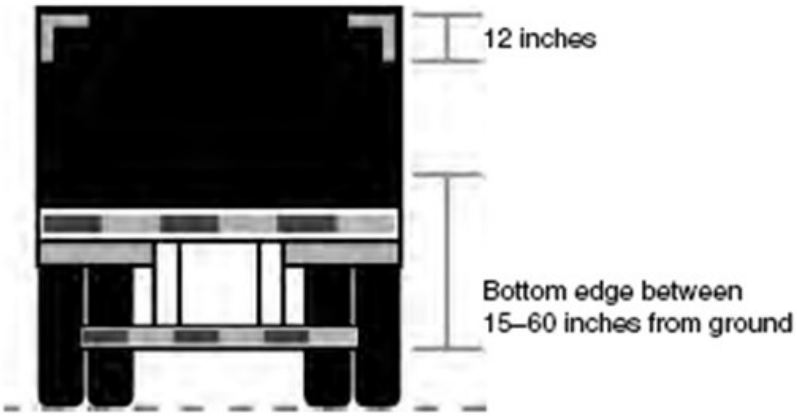

For tanker trailers, the rear tape must be has shown:

- Full-width across the rear-end protection
- Four 12" white strips near the top rear

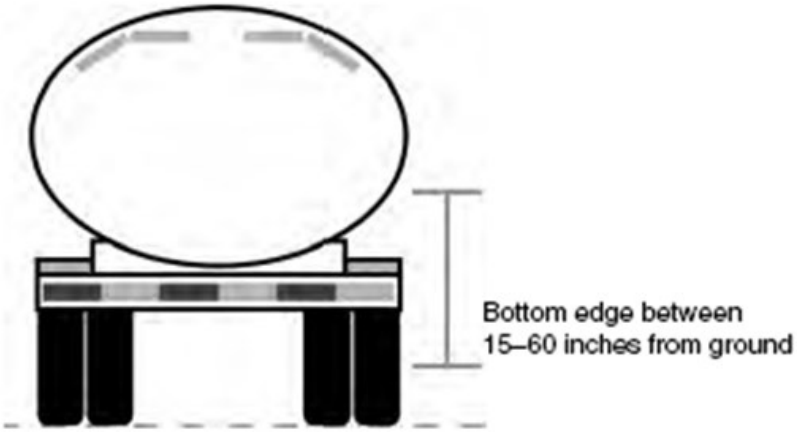

Trailers must be in compliance by June 1, 2001.
Trailers with tape colors other than red and white must be retrofitted by June 1, 2009.

Section 7

Accidents

The Code of Federal Regulations (CFR), Part 390.5 defines accident as an occurrence involving a commercial motor vehicle operating on a public road in interstate or intrastate commerce which results in:

- A fatality;
- Bodily injury to a person, who as a result of the injury, immediately receives medical treatment away from the scene of the accident; or
- Disabling damage to one or more motor vehicles requiring the motor vehicle to be transported way from the scene by a tow truck or other motor vehicle.

The term accident ***does not*** include:

- An occurrence involving only boarding and alighting from a stationary motor vehicle; or
- An occurrence involving only the loading of unloading or cargo; or
- An occurrence in the course of the operation of a passenger car or a multipurpose passenger vehicle by a motor carrier and is not transporting passengers for hire or hazardous materials of a type and quantity that require the motor vehicle to be marked or placarded in accordance with 49 CFR, Part 177.823.

Accident register required (see sample accident register form at the end of this section). 49 CFR, Part 390.15 requires that motor carriers maintain for a period of three years after an accident occurs, an accident register containing at least the following information:

- Time and place of accident
- Driver's name
- Number of injuries and fatalities
- Hazardous materials (other than fuel) released (if any)

The carrier must also maintain copies of all accident reports required by State or other governmental entities or insurers.

A Guide to Determining Preventability of Accidents

Description: A preventable accident is one that occurs because the driver fails to act in a reasonably
expected manner to prevent it. In judging whether the driver's actions were reasonable, one seeks to determine whether the driver drove defensively and demonstrated an acceptable level of skill and knowledge. The judgment of what is reasonable can be based on a company-adopted definition, thus establishing a goal for its safety management programs.

Note that the above definition of a preventable accident is focused on the actions of the driver. It is the commonly used definition in evaluating driver performance. A broader definition, which can be used to evaluate the driver's and the motor carrier's actions, is given by the FMCSR as follows: Preventable accident on the part of the motor carrier means an accident that (1) involved a commercial motor vehicle, and (2) could have been averted but for an act, or failure to act, by the

The heart of accident analysis is the determination of preventability, based on the facts furnished in the motor carrier's recordable accident register, and from various other sources. Each accident must be judged individually. Certain types will generally fall in the non-preventable category, and certain others, in the absence of extenuating circumstances and conditions, fall in the preventable category. The types of accidents shown below do not cover every accident that may occur, but they are intended to provide general guidance in determining preventability.

Non-preventable Accidents

Struck in rear by other vehicle Non-preventable if

- Driver's vehicle was legally and properly parked.
- Driver was proceeding in his/her own lane of traffic at a safe and lawful speed.
- Driver was stopped in traffic due to existing conditions or was stopped in compliance with traffic sign or signal or the directions of a police officer or other person legitimately controlling traffic.
- Driver was in proper lane waiting to make turn.

Struck while parked Non-preventable if

- Driver was properly parked in a location where parking was permitted.
- Vehicle was stopped, parked, or left standing in accordance with Section 392.21 and 392.22 of the Federal Motor Carrier Safety Regulations.
- Body/Chassis
  - More than 30" above ground
  - Empty
- Bumpers or Similar Device
  - Not exceed 30" from ground
  - Not exceed 24" between
  - Not exceed 18" from side
  - Not exceed 24" from rear
- Substantially Constructed
- Firmly Attached

Preventable Accidents

Accidents at intersections

Preventable if

- Driver failed to control speed so that he/she could stop within available sight distance.
- Driver failed to check cross-traffic and wait for it to clear before entering intersection.
- Driver pulled out from side street in the face of oncoming traffic.
- Driver collided with person, vehicle, or object while making right or left turn.
- Driver collided with vehicle making turn in front of him/her.

Striking other vehicle in rear

Preventable if

- Driver failed to maintain safe following distance and have his/her vehicle under control.
- Driver failed to keep track of traffic conditions and did not slow down.
- Driver failed to ascertain whether vehicle ahead was moving slowly, stopped, or slowing down for any reason.
- Driver misjudged rate of overtaking.
- Driver came too close before pulling out to pass.
- Driver failed to wait for vehicle ahead to move into the clear before starting up.
- Driver failed to leave sufficient room for passing vehicle to get safely back in line.

Sideswipe and head-on collisions

Preventable if

- Driver was not entirely in his/her proper lane of travel.
- Driver did not pull to right and slow down or stop for a vehicle encroaching on his/her lane of travel when such action could have been taken without additional danger.

Struck in rear by other vehicle

Preventable if

- Driver was passing slower traffic near an intersection and had to make sudden stop.
- Driver made sudden stop to park, load, or unload.
- Vehicle was improperly parked.
- Driver rolled back into vehicle behind them while starting on grade.

Squeeze plays and shutouts

Preventable if

- Driver failed to yield right-of-way when necessary to avoid accident.

Backing accidents

Preventable if

- Driver backed up when backing could have been avoided by better planning of his/her route.
- Driver backed into traffic stream when such backing could have been avoided.
- Driver failed to get out of cab and check proposed path of backward travel.
- Driver depended solely on mirrors when it was practicable to look back.
- Driver failed to get out of cab periodically and recheck conditions when backing a long distance.
- Driver failed to check behind vehicle parked at curb before attempting to leave parking space.
- Driver relied solely on a guide to help him/her back.
- Driver backed from blind side when he/she could have made a sight-side approach.

Accident involving rail-operated vehicles

Preventable if

- Driver attempted to cross tracks directly ahead of train or streetcar.
- Driver ran into side of train or streetcar.
- Driver stopped or parked on, or too close to, tracks.

Accidents while passing

Preventable if

- Driver passed where view of road ahead was obstructed by hill, curve, vegetation, traffic, adverse weather conditions, etc.
- Driver attempted to pass in the face of closely approaching traffic.
- Driver failed to warn driver of vehicle being passed.
- Driver failed to signal change of lanes.
- Driver pulled out in front of other traffic overtaking from rear.
- Driver cut in too short while returning to right lane.

Accidents while being passed

Preventable if

- Driver failed to stay in his/her own lane and hold speed, or reduce it, to permit safe passing.

Accidents while entering traffic stream

Preventable if

- Driver failed to signal when pulling out from curb.
- Driver failed to check traffic before pulling out from curb.
- Driver failed to look back to check traffic if he/she was in position where mirrors did not show traffic conditions.
- Driver attempted to pull out in a manner that forced other vehicles to change speed or direction.
- Driver failed to make full stop before entering from side street, alley, or driveway.
- Driver failed to yield right-of-way to approaching traffic.

Pedestrian accidents

Preventable if

- Driver did not reduce speed in area of heavy pedestrian traffic.
- Driver was not prepared to stop.
- Driver failed to yield right-of-way to pedestrian.

Mechanical defects accidents

Preventable if

- Defect was of a type that driver should have detected in making pre-trip or en-route inspection of vehicle.
- Defect was of a type that driver should have detected during the normal operation of the vehicle.
- Defect was caused by driver's abusive handling of the vehicle.
- Defect was known to the driver, but ignored.
- Driver was instructed to operate with known defect.

All types of accidents

Preventable if

- Driver was not operating at a speed suitable for the existing conditions of road, weather, and traffic.
- Driver failed to control speed so that he/she could stop within assured clear distance
- Driver misjudged available clearance.
- Driver failed to yield right-of-way to avoid accident.
- Driver failed to accurately observe existing conditions.
- Driver was in violation of company operating rules or special instructions, the regulations of an Federal or State regulatory agency, or any applicable traffic laws or ordinances.

REVENUE NECESSARY TO PAY FOR ACCIDENT LOSSES

This table shows the dollars of revenue required to pay for different amounts of costs for accidents.

Generally, it is necessary for a motor carrier to generate an additional $1,250,000 of revenue to pay the cost of a $25,000 accident, assuming an average profit of 2%. The amount of revenue required to pay for losses will vary with the profit margin (as shown in the chart below).

REVENUE REQUIRED TO COVER LOSSES

	VS. PROFIT MARGIN				
YEARLY ACCIDENT COSTS	1%	2%	3%	4%	5%
$1,000	$100,000	$50,000	$33,000	$25,000	$20,000
5,000	500,000	250,000	167,000	125,000	100,000
10,000	1,000,000	500,000	333,000	250,000	200,000
25,000	2,500,000	1,250,000	833,000	625,000	500,000
100,000	10,000,000	5,000,000	3,333,000	2,500,000	2,000,000
150,000	15,000,000	7,500,000	5,000,000	3,750,000	3,000,000
200,000	20,000,000	10,000,000	6,666,000	5,000,000	4,000,000

Accident costs consist of any/or all of the following:

- Vehicle damage
- Loss of revenue
- Administrative costs
- Police reports
- Cargo damage
- Possible effects on cost of insurance
- Possible effect on cost of Workmen's Compensation insurance
- Towing
- Storage of damaged vehicle
- Damage to customer relationships
- Legal fees
- Customer's loss of revenue directly attributable to accident

ACCIDENT REGISTER

Index Number	Date	Location City/State	Driver's Name	Number of Injuries	Number of Fatalities	Vehicles Towed	Hazmat Incident

Section 8

Driver's Hours Of Service

(49 CFR, Part 395)

GENERAL RULES:

Recaps: It is recommended that carriers and drivers keep a summary (recap) of drivers' hours worked and hours available. This will help prevent hours of service violations.

Records of Duty Status (Log Books) required: Every carrier must require every driver to make a record of duty status (log), in duplicate for each 24-hour period, **unless** operating under the short-haul provisions described below.

Forwarding to carrier: The driver must give or send by mail the original of the driver's records of
duty status (log) to his/her employing carrier within 13 days after completing the record. When a motor carrier uses a driver initially or intermittently, that carrier must obtain from him/her a signed statement giving the total time on duty during the immediately preceding 7 days and the time at which he/she was last relieved of duty. (Sample form for recording this information is attached on following pages.)
The carrier must then keep the record of duty status (log) for 6 months at the carrier's principal place of business.

Alternative to logs, motor carriers may require a driver to use an automatic onboard recording device to record duty status. The recording device must meet the requirements of CFR 49, Part 395.15. The driver must still have in his/her possession records of duty status in automated or written form, for the previous seven consecutive days. All hard copies of the driver's record of duty status must be signed by the driver.

On Duty Time: As of February 27, 2012, on duty time does not include any time resting in a parked vehicle (property and passenger carriers) or up to two hours riding in the passenger seat of a moving property carrier vehicle immediately before or after a period of at least 8 consecutive hours in the
sleeper birth.

Hours of Service Rules for Property-Carrying Operations:

Drivers of property carrying vehicles must comply with the following:

- May drive a maximum of 11 hours after 10 consecutive hours off duty.
- May not drive beyond the 14th consecutive hour after coming on duty, following 10 consecutive hours off duty.
- May not drive after 60/70 hours on duty in 7/8 consecutive days.
- CMV drivers using the sleeper berth provision must take at least 8 consecutive hours in the sleeper berth, plus 2 consecutive hours either in the sleeper berth, off

Short – Haul Provision

100 air-mile exemption: (For Property-carrying operations only) A driver does not have to make a record of duty status (log) if all of the following apply:

- The driver operates within a 100 air-mile radius of the normal work reporting location.
- The driver returns to the work reporting location and is released from work within 12 consecutive hours.
- At least 10 consecutive hours off duty separate each 12 consecutive hours on duty.
- The driver does not exceed 11 hours maximum driving time following 10 consecutive hours off duty.
- The motor carrier maintains and retains for 6 months accurate and true time records showing the following:
  - › The time the driver reports for duty each day.
  - › The total number of hours the driver is on duty each day.
  - › The time the driver is released from duty each day.
  - › The total time for the previous 7 days for drivers that are used for the first time or by more than one motor carrier company.
- Motor Carrier must retain all supporting documents.

16-Hour Short-Haul Exception

A property-carrying driver may drive beyond the 14th consecutive hour after coming on duty if all of the following apply:

- The driver has returned to the driver's normal work reporting location and the carrier released the driver from duty at that location for the previous five duty tours the driver has worked;
- The driver has returned to the normal work reporting location and the carrier releases the driver from duty within 16 hours after coming on duty following 10 consecutive hours off duty;
- The driver has not taken this exemption within the previous 6 consecutive days, except when the driver has begun a new 7- or 8-consecutive day period with the beginning of any off-duty period of 34 or more consecutive hours.

Short-haul drivers who normally use the 100-air-mile exemption and do not complete a standard grid log will have to complete a log on days when they use this exception, because they are working beyond the 12-hour limit.

Note: There is no definition of "short haul" or "normal work reporting location." These terms are generally understood to refer to drivers who start from and return to the same location on a daily basis.

Short – Haul Provision, Non CDL Drivers

Drivers of property-carrying CMVs ***which do not require*** a CDL for operation and who operate within a 150 air-mile radius of their normal work reporting location:

- May drive a maximum of 11 hours after coming on-duty following 10 or more consecutive hours off duty.
- Are not required to keep records of duty status (RODS).
- May not drive after the 14th hour after coming on duty 5 days of any period of 7 consecutive days or after the 16th hour after coming on duty 2 days of any period of 7 consecutive days.
- Must not drive more than 60 hours in 7 consecutive days or 70 hours in 8 consecutive days. Any period of 7 or 8 consecutive days may end with the beginning of any off-duty period of 34 or more consecutive hours.
- Employers must maintain and retain accurate time records for a period of 6 months showing the time the duty period began, ended, and total hours on duty each day in lieu of RODS.
- Motor Carrier must retain all supporting documents.

Rest Breaks Required

Property Carrier drivers must not drive if more than 8 hours have passed since the end of the driver's last off-duty or sleeper-berth period of at least 30 minutes. This rule does not apply to drivers operating under a short-haul provision.

34 Hour Restart

Property carrier drivers may end any period of 7/8 consecutive days with the beginning of an off-duty period of 34 or more consecutive hours. The 34 hours restart may only be used once per week, or 168 hours, measured from the beginning of the previous restart.

Hours of Service Rules for Passenger-Carrying Operations:

Drivers of passenger carrying vehicles must comply with the following:

- May drive a maximum of 10 hours after 8 consecutive hours off duty.
- May not drive after having been on duty 15 hours following 8 consecutive hours off duty.
- May not drive after 60/70 hours on duty in 7/8 consecutive days
- CMV drivers using the sleeper berth provision must take at least 8 consecutive hours in the sleeper berth. This may be split into 2 periods, each at least 2 hours long.
- Motor Carrier must retain all supporting documents.

Short – Haul Provision

100 air-mile exemption: (For Passenger-carrying operations only) A driver does not have to make a record of duty status (log) if all of the following apply:

- The driver operates within a 100 air-mile radius of the normal work reporting location.
- The driver returns to the work reporting location and is released from work within 12 consecutive hours.
- At least 8 consecutive hours off duty separate each 12 consecutive hours on duty.
- The driver does not exceed 10 hours maximum driving time following 8 consecutive hours off duty.
- The motor carrier maintains and retains for 6 months accurate and true time records showing the following:
  - The time the driver reports for duty each day.
  - The total number of hours the driver is on duty each day.
  - The time the driver is released from duty each day.
- Motor Carrier must retain all supporting documents.

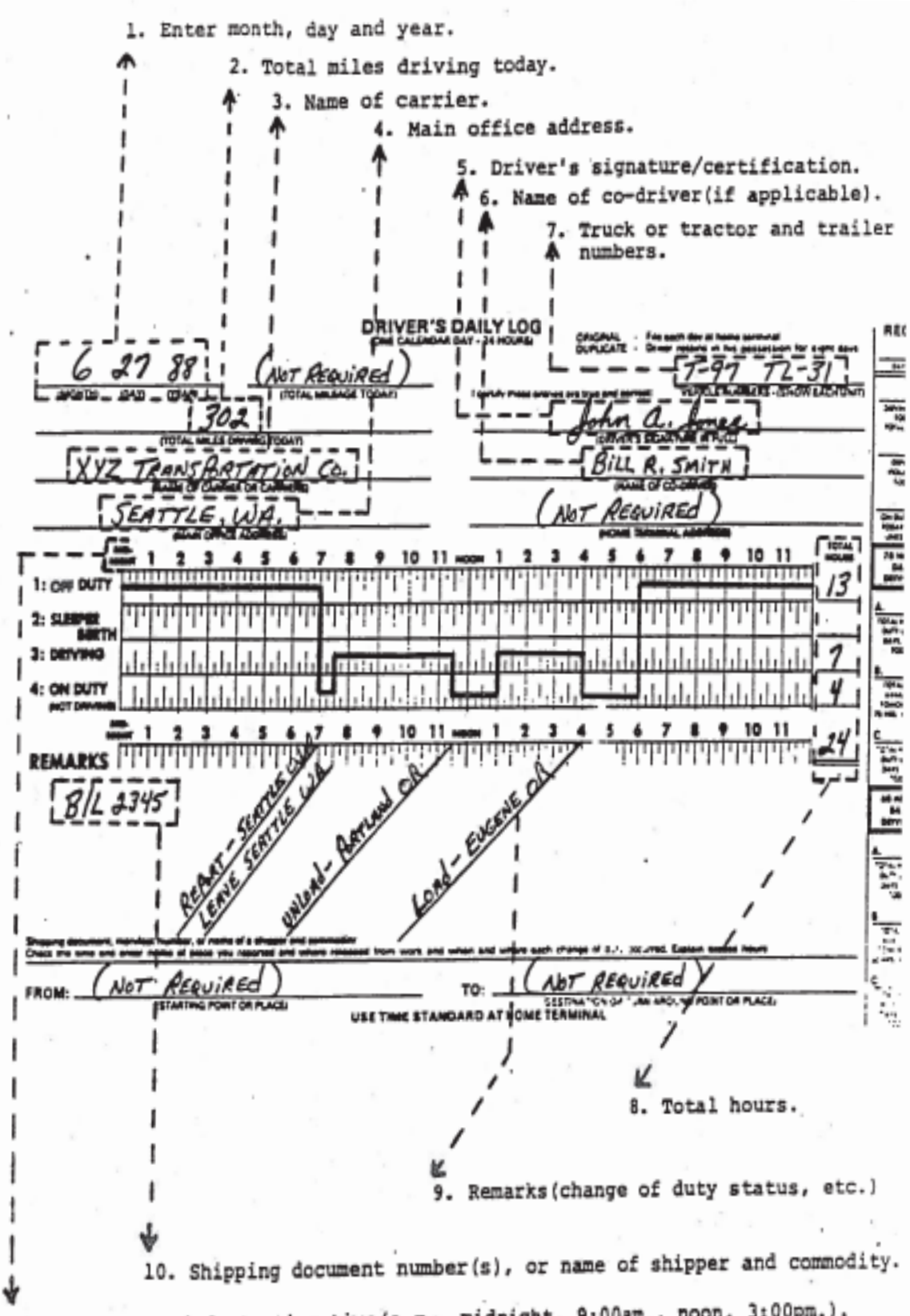
1. Enter month, day and year.
2. Total miles driving today.
3. Name of carrier.
4. Main office address.
5. Driver's signature/certification.
6. Name of co-driver(if applicable).
7. Truck or tractor and trailer numbers.
DRIVER'S DAILY LOG
6 27 88
(NOT REQUIRED)
302
XYZ TRANSPORTATION Co.
SEATTLE, WA.
T-97 TL-31
John A. Jones
BILL R. SMITH
(NOT REQUIRED)
1: OFF DUTY
2: SLEEPER BERTH
3: DRIVING
4: ON DUTY
13
7
4
24
REMARKS
BIL 2345
REPORT - SEATTLE WA
LEAVE SEATTLE WA
UNLOAD - PORTLAND OR
LOAD - EUGENE OR
FROM: (NOT REQUIRED)
TO: (NOT REQUIRED)
USE TIME STANDARD AT HOME TERMINAL
8. Total hours.
9. Remarks(change of duty status, etc.)
10. Shipping document number(s), or name of shipper and commodity.
11. 24-hour period starting time(e.g., midnight, 9:00am., noon, 3:00pm.).

U.S. DEPARTMENT OF TRANSPORTATION

DRIVER'S DAILY LOG
(ONE CALENDAR DAY - 24 HOURS)

ORIGINAL - Submit to carrier within 13 days
DUPLICATE - Driver retains possession for eight days

(MONTH) (DAY) (YEAR) (TOTAL MILES DRIVING TODAY) VEHICLE NUMBERS - (SHOW EACH UNIT)

I certify these entries are true and correct:

(NAME OF CARRIER OR CARRIERS) (DRIVER'S SIGNATURE IN FULL)

(MAIN OFFICE ADDRESS) (NAME OF CO-DRIVER)

	MID-NIGHT	1	2	3	4	5	6	7	8	9	10	11	NOON	1	2	3	4	5	6	7	8	9	10	11	MID-NIGHT	TOTAL HOURS
1: OFF DUTY																										
2: SLEEPER BERTH																										
3: DRIVING																										
4: ON DUTY (NOT DRIVING)																										
REMARKS																										

Pro or Shipping No. _____

Employee Signature_____ Employee Number_____

CHECK IF LOG SHEET IS ATTACHED ☐		CHECK IF LOG SHEET IS ATTACHED ☐		CHECK IF LOG SHEET IS ATTACHED ☐		CHECK IF LOG SHEET IS ATTACHED ☐		CHECK IF LOG SHEET IS ATTACHED ☐		CHECK IF LOG SHEET IS ATTACHED ☐		CHECK IF LOG SHEET IS ATTACHED ☐	
SUNDAY		MONDAY		TTUESDAY		WEDNESDAY		THURSDAY		FRIDAY		SATURDAY	
Date:		Date:		Date:		Date:		Date:		Date:		Date:	
TIME	ON DUTY HRS.	TIME	ON DUTY HRS.	TIME	ON DUTY HRS.	TIME	ON DUTY HRS.	TIME	ON DUTY HRS.	TIME	ON DUTY HRS.	TIME	ON DUTY HRS.
ON		ON		ON		ON		ON		ON		ON	
OFF		OFF		OFF		OFF		OFF		OFF		OFF	
ON		ON		ON		ON		ON		ON		ON	
OFF		OFF		OFF		OFF		OFF		OFF		OFF	
ON		ON		ON		ON		ON		ON		ON	
OFF		OFF		OFF		OFF		OFF		OFF		OFF	
ON		ON		ON		ON		ON		ON		ON	
OFF		OFF		OFF		OFF		OFF		OFF		OFF	
Total On-Duty Hours		Total On-Duty Hours		Total On-Duty Hours		Total On-Duty Hours		Total On-Duty Hours		Total On-Duty Hours		Total On-Duty Hours	
Total On-duty Hours Last 7 days		Total On-duty Hours Last 7 days		Total On-duty Hours Last 7 days		Total On-duty Hours Last 7 days		Total On-duty Hours Last 7 days		Total On-duty Hours Last 7 days		Total On-duty Hours Last 7 days	

Driver Time Record

Month:_____Year:_____

Driver's Name (Print): Employee No.

COMPANIES MAY PREPARE THIS REPORT INSTEAD OF THE DRIVERS DAILY LOG IF THE FOLLOWING APPLY:

The driver operates wholly within 100 air mile radius of the work reporting location (150 air mile radius for NON CDL property carrier drivers), the driver is released from work at the work reporting location within 12 consecutive hours and the driver has at least 10 consecutive hours off duty (8 consecutive hours off duty for Passenger carriers). The drivers are still subject to the maximum driving and on duty times per CFR 49 Part 395.

Date	Start Time	Stop Time	Total On Duty Time	
1				
2				
3				
4				
5				
6				
7				
8				
9				
10				
11				
12				
13				
14				
15				
16				
17				
18				
19				
20				
21				
22				
23				
24				
25				
26				
27				
28				
29				
30				
31				

Hours-Of-Service Record for First Time or Intermittent Drivers

Instructions: When using a driver for the first time or intermittently, a signed statement must be obtained, giving the total time on duty (driving and on-duty) during the immediately preceding seven days and the time at which the driver was last relieved from duty prior to beginning work.

Name (Printed)_____

Day	Total time on duty
1	_____
2	_____
3	_____
4	_____
5	_____
6	_____
7	_____
Total	_____

I hereby certify that the information contained hereon is true to the best of my knowledge and belief, and that my last period of release from duty was from

_____ to _____
(Hour/date) (Hour/date)

Driver's Signature_____ Date_____

NOTE: This form should be reproduced on company letterhead. If letterhead is unavailable, the name, mailing and physical addresses and telephone number of the company should be shown on the form.

To Whom It May Concern:

This letter authorizes our driver _____
to be off-duty during meal and other routine stops.

The purpose of the Federal Hours of Service Regulations (Part 395) is to keep tired drivers from operating vehicles. Under certain circumstances, however, it appears that enroute stops for meals or other routine purposes may serve to lessen a driver's fatigue.

Therefore, this letter is authorization for you to record your meal or other routine stops on your logs as "off-duty," rather than "on-duty not driving" as would normally be the case. However, this may be done only under all of the following circumstances:

- Your vehicle must be parked in a safe and secure manner to prevent obstruction of traffic and theft or damage to the vehicle and cargo.
- The off-duty period must be no less than 30 minutes and no longer than 60 minutes.
- During the off-duty period, you are relieved from any and all responsibility for your vehicle and cargo.
- During the off-duty period, you are free to leave the premises on which your vehicle is parked and to pursue activities of your choosing, as long as your ability to safely operate your vehicle is not impaired as required by part 392, "Driving of Vehicles," of the Federal Motor Carrier Safety Regulations.

Signature of Company Official_____

Printed Name of Company Official _____

Title of Company Official authorizing Off-Duty Status _____

Date Signed:_____

(Name of Carrier)

This letter, under the provisions of the Federal Motor Carrier Safety Regulations, Title 49, Part 395, authorizes our driver _____, to record all meal breaks and rest breaks as "Off-Duty" time so long as the following conditions are met:

1. All breaks must be of at least 30 minutes duration.
2. Your vehicle must be legally parked and secured.
3. No passengers are to remain on your vehicle.
4. You conduct no other company business.

In addition, you may record as "Off-Duty" all time your vehicle is parked for an extended period of time (i.e.; a ball game, ski trip etc.), if your vehicle is legally parked, all passengers have disembarked and you conduct no other company business. If you choose to rest in your vehicle during this time, you must not be at the driving controls (in the driver's seat) and must not allow passengers on board.

If all the above requirements are met during the off-duty period, you will be relieved of all duty and responsibility for the care and custody of your vehicle, it's accessories and passengers. During the off-duty period you are free to leave the premises on which your vehicle is parked may pursue activities of your choosing, as long as your ability to safely operate your vehicle is not impaired as required in CFR 49, Part 392 "Driving of Commercial Motor Vehicles".

_____
(Title of person signing)

ATA's Summary of HOS Changes

http://www.trucking.org/Safety/042013_ATA%20Summary%20of%20Final%20HOS%20Rules.pdf

ATA's HOS Comparison Chart

http://www.trucking.org/Safety/HOS%20comparison%20chart.pdf

FMCSA's Summary of HOS Changes

https://www.fmcsa.dot.gov/documents/hos/HOS_Compare_new_rule_to_current.pdf

FMCSA's Interstate Truck Driver's Guide to Hours of Service, Updated February 2013

https://www.fmcsa.dot.gov/documents/hos/Interstate-Truck-Driver-Guide-to-HOS_508.pdf

FMCSA's Logbook Examples

http://www.fmcsa.dot.gov/documents/hos/logbook.pdf

Section 9

Inspection, Repair, And Maintenance

(49 CFR, Part 396)

Each carrier must inspect, repair, and maintain all motor vehicles under its control.

Required records:

- Identification of the vehicle including company number (if so marked), make, serial number, year, and tire size. Also, if the carrier does not own the vehicle, the records must show the name of the person providing the vehicle.
- A preventative maintenance schedule.
- Record of inspection, repairs, and maintenance conducted on all vehicles.
- A record of tests conducted on push-out windows, emergency doors, and emergency door marking lights on buses. These tests must be conducted at least once every 90 days

Record Retention: Maintenance records must be kept for a period of one year where the vehicle is housed or maintained.

They must be kept for a period of at least 6 months after the vehicle leaves the carrier's control.

Roadside inspection reports: Any driver who receives a roadside inspection report must deliver it to his/her employing motor carrier. An official of the motor carrier must examine the roadside inspection report and ensure that any violations or defects noted on the report are corrected. The motor carrier must sign the report and maintain a copy for 12 months from the date of the inspection.

Pre-trip Inspection: Before starting out, the driver must be satisfied that the motor vehicle is in safe
operating condition. If the last driver vehicle inspection report (DVIR) notes any defects, the driver must review and sign to acknowledge that necessary repairs have been completed.

Driver Vehicle Inspection Report (DVIR): Every carrier must require its drivers to complete a DVIR at the end of each day. The report must identify the commercial motor vehicle and list any defects that could affect its safe operation. Every driver is responsible for preparing such a report for each commercial motor vehicle driven.

NOTE: This publication not intended for sale.

Driver Vehicle Inspection Report (DVIR): Every carrier must require its drivers to complete a DVIR at the end of each day. The report must identify the commercial motor vehicle and list any defects that could affect its safe operation. Every driver is responsible for preparing such a report for each commercial motor vehicle driven.

The DVIR report must cover at least the following parts and accessories:

• Service brakes (including trailer brake connections). • Parking (hand) brakes. • Steering mechanism. • Lighting devices and reflectors. • Tires.	• Horn. • Windshield wipers. • Coupling devices. • Wheels and rims. • Emergency equipment. • Rear Vision Mirrors.

Every carrier must keep the original DVIR for at least 90 days. The report must contain all required signatures. All defects that affect the safe operation of the vehicle(s) must be corrected prior to dispatching the vehicle.

Periodic Inspection:

- Conducted on all motor vehicles under the carrier's control.
- At least once a year.
- Inspect all Appendix G components (refer to example).
- Retain a copy of the periodic inspection where the vehicle is housed or maintained.
- Retain proof of the periodic inspection on the vehicle.

Periodic Inspector's Qualifications:

Motor carriers must ensure that persons performing periodic inspections are qualified. Inspectors must:

- Understand the inspection standards of Part 393 and Appendix G.
- Be able to identify defective components.
- Have knowledge and proficiency in methods, procedures, and tools.

Inspectors may have gained experience or training by:

- Completing a State or Federal training program, or earning a State or Canadian Province qualifying certificate in commercial motor vehicle safety inspections.
- A combination of other training or experience totaling at least one year.

Motor carriers must retain evidence of an inspector's qualifications until one year after the inspector ceases to perform inspections for the carrier.

The motor carrier may meet periodic inspection requirements through:

- State or other jurisdiction's roadside inspection program.
- Mandatory State inspection program -- These programs must be determined by the FHWA to be comparable to the Federal annual inspection program.

Brake inspector qualification: The motor carrier is responsible for ensuring that all inspections, maintenance, repairs, and service to brakes of commercial motor vehicles comply with these regulations. The carrier must ensure that the employees responsible for brake inspection, maintenance, service, or repairs meet minimum brake inspector qualifications.

The brake inspector must:

- Understand and be able to perform the brake service and inspection.
- Know the methods, procedures, tools and equipment needed.
- Be qualified to perform brake service or inspection by training and/or experience.

Qualifying brake training or experience includes successful completion of:

- A State, Canadian Province, Federal agency, or union training program.
- A State-approved training program.
- Training that led to attainment of a State or Canadian Province qualifying certificate to perform assigned brake service or inspection tasks, including passage of CDL air brake test in the case of a brake inspection.

OR

- One year of brake-related training, experience, or a combination of both.

Motor carriers must maintain evidence of inspector qualifications at the principal place of business or the location where the inspector works. Evidence must be retained for the period during which the brake inspector is employed in that capacity, and for one year thereafter.

Sample maintenance forms/records and pre-trip and post trip inspection diagrams are contained at the end of this section.

DRIVER'S WALK-AROUND SAFETY INSPECTION

Based on the North American Standard Inspection Procedures

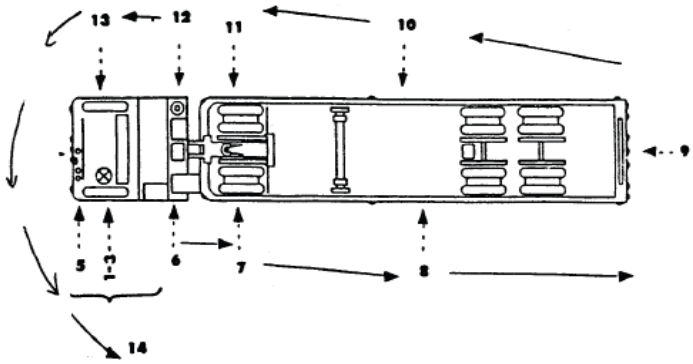

THE PRE-TRIP:

1. **PREPARING THE VEHICLE**
   - Note general condition. If unit is leaning it may indicate broken spring, poor load distribution or flat tire. Look for signs of fuel, oil or water leaks. Ensure parking brake is applied.
   - Review last vehicle inspection report. Note any defects reported by previous driver. Confirm necessary repairs were made.
2. **ENGINE COMPARTMENT**
   - Check all hoses for signs of leakage or seeping.
   - Wiring--Check for cracked or worn insulation.
3. **INSIDE CAB**
   - Start engine--Listen for any unusual noise.
   - Check gauges--Including oil pressure, ammeter and/or voltmeter, coolant temperature, engine oil temperature and warning devices.
   - Condition of controls--Check for looseness, sticking, damage or improper setting of steering wheel, clutch, accelerator, foot brake, trailer brake, parking brake, retarder controls, transmission controls, interaxle differential lock, horn(s), wiper/washer, headlights, dimmer switch, turn signals, 4-way flashers and clearance marker lights.
   - Seats, seat belts.
   - Windshield, and mirrors--Check for cracks, dirt, and illegal stickers.
   - Wipers--Check for operation.
   - Emergency equipment--Spare fuses (if applicable), three reflective triangles, properly charged and rated fire extinguisher within arm's reach of driver's seat. Flares, lanterns and flags are optional.
   - Check for excessive play in steering wheel. (Manual steering play should not exceed power steering should be less than 45 degrees.)
4. **FRONT OF CAB**
   - Steering system--Look for loose, worn, bent, damaged or missing parts.
   - Headlamps, turn signals, and emergency flashers--Check for proper color and operation.
   - Suspension (both sides)--Check leaf springs for broken or missing parts, leaves out of alignment, or contact with the vehicle body. Check U-bolts for loose, cracked or missing parts. Check mounting hardware for cracks, missing bolts, or pins.
   - Front Brakes (both sides)-- Assure all components are attached and operational. Check brake lines for leaks or damage and chambers (if visible) for cracks or insecure mounting. Check brake linings. They should be free of large cracks or missing pieces. No grease or oil should be on the linings or drums. Make certain the pushrod and slack adjuster are mechanically operational. Check for audible air leaks. (If possible, ask a helper to apply the brakes, hold them, then release them when you signal. Check for excessive slack adjuster travel. If visible, check brake drums for external cracks that open upon application.)
5. **LEFT SIDE OF CAB**
   - Left front wheel--Check for defective welds, cracks or breaks, especially between hand holds or stud holes; unseated locking rings; broken, missing or loose lugs, studs or clamps; bent or cracked rims. Check for "bleeding" rust stains, defective nuts or elongated stud holes. Spoke wheels should be checked for cracks across spokes. Scrubbed or polished areas on either side of the lug indicate a slipped rim. Rims should also be checked for cracks or bends. Valve stem should be straight and equidistant from wheel spokes.
   - Left front tire --Check for bulges, leaks, sidewall separations, cuts, exposed fabric, worn spots. Check for proper inflation. Measure the tread depth (2/32" minimum). Check for tire contact with any part of the vehicle.
   - Frame--Look for cracked, sagging rails. Check for broken or loose bolts or brackets.

(Form 27 – Rev. 10-2001)

6. **LEFT FUEL TANK AREA**
   - Left fuel tank(s)--Check fuel level. Check for insecure mounting, leaks, or other damage. Check for unsecured cap(s) or loose connections. Verify that the fuel crossover line is secure.
   - Air and electrical lines--Check the lines between the tractor and the trailer for tangles, crimps or chafing or dragging. Check connections. Listen for leaks.
   - Hose couplers (glad hands)--Check mounting. Look for leaks or other damage.
   - Frame--Look for cracked, sagging rails. Check for broken or loose bolts or brackets.

7. **LEFT REAR TRACTOR AREA**
   - Wheels, rims and tires--Inspect as described in Item 5. Examine inside tire, making sure both tires are same height. Check between tires for debris or contact. Check for flat tires inside or outside.
   - Suspension and brakes--Inspect as described in item 4.
   - Fifth wheel—Check for cracks along the fifth wheel plate and mounting area.
   - Ensure locking jaws are properly engaged. Check for loose or missing nuts and bolts. Operating handle should be closed and latched. (For sliding fifth wheels, make sure the slider is locked.)
   - Lamps—Check tractor stop lamps and turn signals for color and operation.
   - Frame—Look for cracked, sagging rails. Check for broken or loose bolts or brackets.

8. **LEFT SIDE OF TRAILER**
   - Wheels, rims and tires—Inspect as described in Item 5.
   - Visible suspension and brake components—Inspect as described in Item 4.
   - Cargo securement—For flatbeds, check header board for proper type and mounting. Check blocking and bracing, chains, straps and side posts. Check for shifted cargo. Check tarps.
   - Check for burned out or missing market lights, reflectors.

9. **REAR OF TRAILER**
   - Stop lamps, tail lamps, turn signals, emergency flashers, reflectors, and clearance and marker lights—Check for proper operation, color, and cleanliness.
   - Suspension—Check as described in Item 4.
   - Brakes—Check as described in Item 4.
   - Rear bumper—Check for damage, missing pieces.
   - Tires, wheels—Check as described in Item 5.
   - Cargo securement—Verify that doors are locked/latched. For flatbeds, inspect as described in Item 8.
   - Markings—Check for proper placarding, license plate light operable.
   - Frame—Look for cracked, sagging rails. Check for broker or loose bolts or brackets.

10. **RIGHT SIDE OF TRAILER**
    - Check all items as on left side.
    - Spare tire—check for secure mounting, proper inflation.
    - Landing gear or dollies—Should be fully raised. Check for missing, bent or damaged parts, secured crank handle.

11. **RIGHT REAR TRACTOR AREA**
    - Check all items as on left side (See Item 7.)

12. **RIGHT FUEL TANK AREA**
    - Exhaust system—Check for secure mounting, leaks (under cab), exhaust contacted by fuel or air lines or electrical wires. Look for carbon deposits around seams and clamps indicating exhaust leaks.
    - Check all items as on left side.

13. **RIGHT SIDE OF CAB**
    - Check all items as on left side. (See Item 5.)

14. **RETURN TO CAB**
    - Air pressure—Pump up air system, check gauge. Check low air pressure warning device by depleting air supply (pump the foot brake valve). Warning light/buzzer should activate at about 55 psi or above.
    - Parking brakes—With seat belt fastened, release brakes. As vehicle begins to move, activate parking brakes to check operation.
    - Service brakes—At about 5 mph, apply brakes. Note any unusual pulling, delay or play in the brake pedal.
    - Paperwork—Update logbooks, sign off on Vehicle Inspection Report, check for proper bills of lading, licenses on both vehicles, placards, permits and inspection stickers and medical certificate and waiver if required.

THE POST TRIP:

Every motor carrier shall require its drivers to report, and every driver shall prepare a report, in writing at the completion of each day's work on each vehicle operated.

The inspection and report shall cover at least the following parts and accessories:

- Service brakes including trailer brake connections;
- Parking (hand) brake;
- Steering mechanism;
- Lighting devices and reflectors;
- Tires;
- Horn;
- Windshield wipers;
- Rear vision mirrors;
- Coupling devices;
- Wheels and rims; and
- Emergency equipment.

To complete this inspection, refer to the sections related to the above-listed items on the pre-trip inspection guide.

(Form 27 – Rev. 10-2001)

DRIVER/VEHICLE INSPECTION REPORT (49 CFR 396.11)

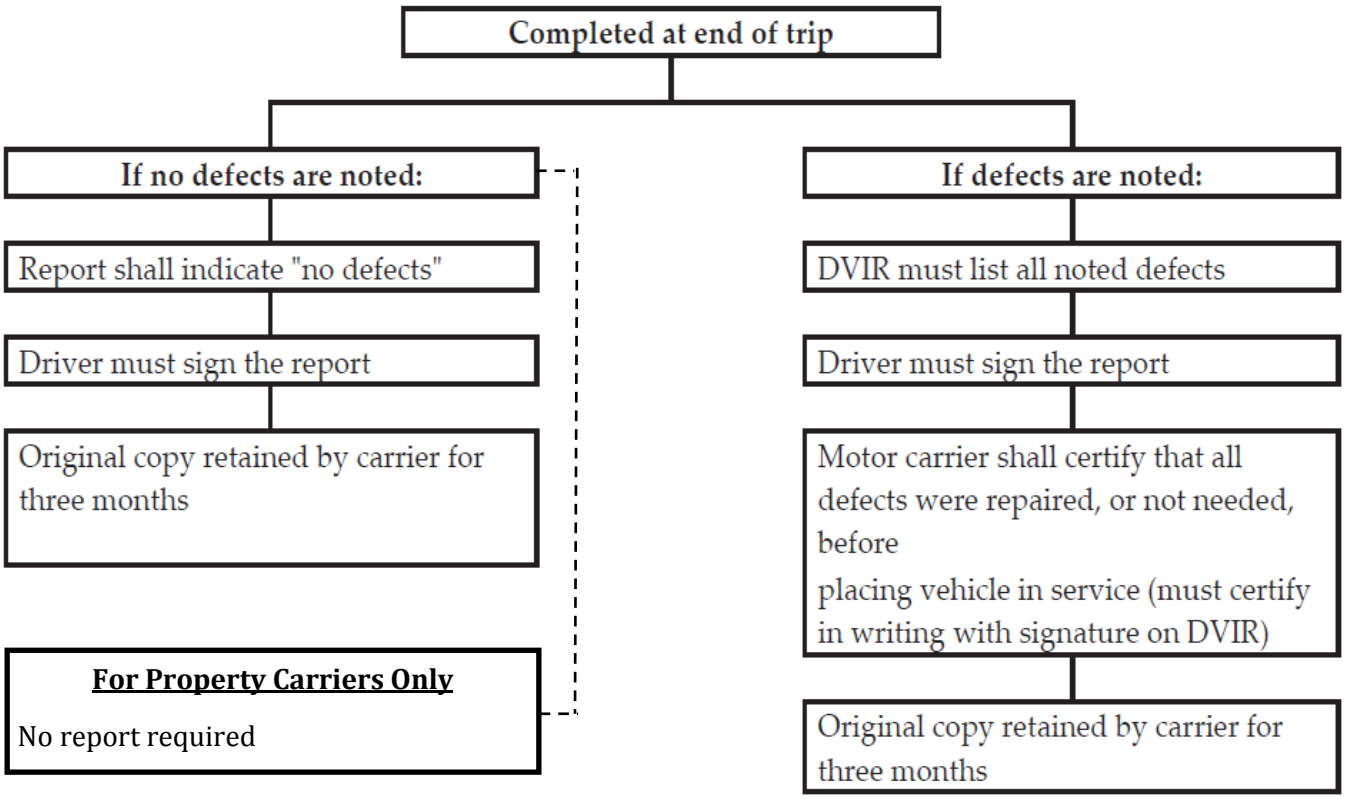

PRE-TRIP INSPECTION (49 CFR, PART 396.13)

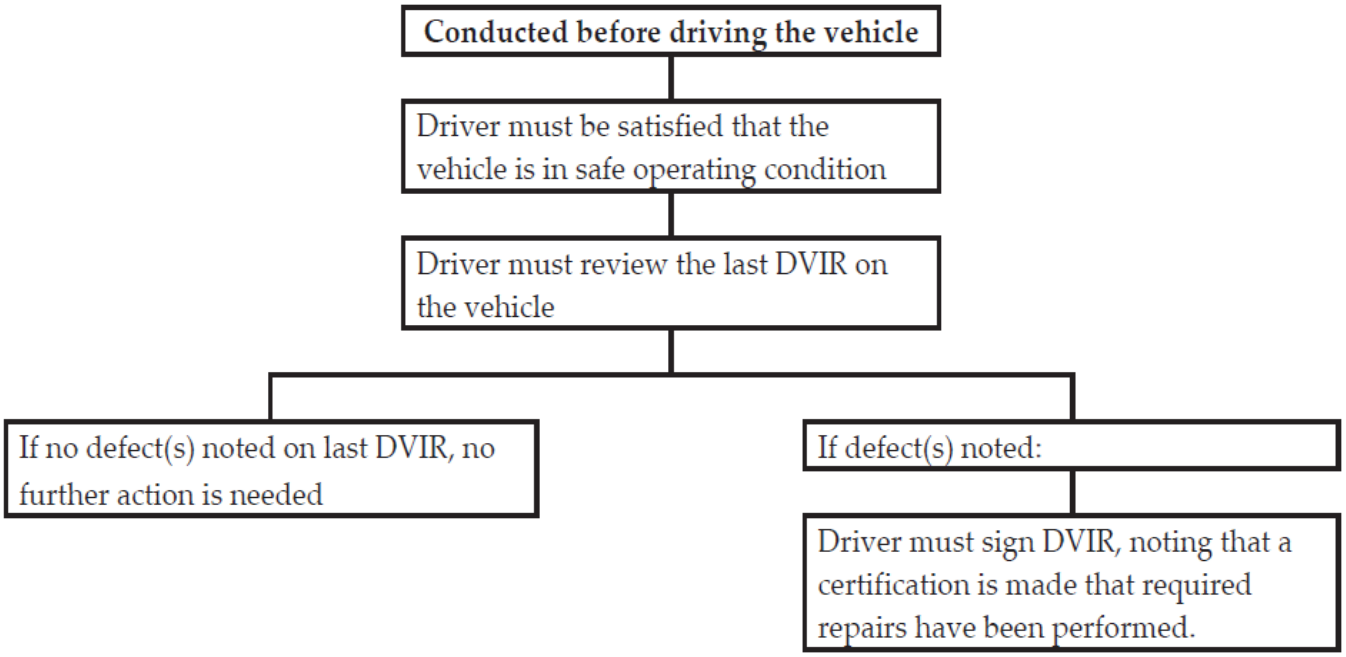

See 49 CRF 396.11 requirement

Driver instruction: Check any defective item that was observed by or reported to you and give details under "Remarks."

DATE:_____VEHICLE NUMBER:_____

_____ SERVICE BRAKES, PARKING BRAKE
_____ STEERING
_____ LIGHTS
_____ TIRES
_____ HORN
_____ OTHER
_____ WINDSHIELD WIPERS
_____ MIRRORS
_____ COUPLING DEVICES
_____ WHEELS & RIMS
_____ EMERGENCY EQUIPMENT

REMARKS:

_____Condition of the above vehicle is SATISFACTORY.

Driver's Signature: _____

_____ Above defects corrected.
_____ Above defects need not be corrected for safe operation of vehicle.

Mechanic's or carrier official's signature certifying repairs:

_____ Date _____

Next day driver's signature:

_____ Date _____

(Note: The motor carrier will maintain the original driver vehicle inspection report, the certification of repairs and the certification of the driver's review for three months from the date the written report was prepared.)

Driver's Vehicle Inspection Report

Check any defective Item and give details under "Remarks."

DATE:_____

TRUCK/TRACTOR NO._____

- ❑ Air Compressor
- ❑ Air Lines
- ❑ Battery
- ❑ Brake Accessories
- ❑ Brakes
- ❑ Carburetor
- ❑ Clutch
- ❑ Defroster
- ❑ Drive Line
- ❑ Engine
- ❑ Fifth Wheel
- ❑ Front Axle
- ❑ Fuel Tanks
- ❑ Heater
- ❑ Horn
- ❑ Lights
- ❑ Head - Stop
- ❑ Tail - Dash
- ❑ Turn Indicators
- ❑ Mirrors
- ❑ Muffler
- ❑ Oil Pressure
- ❑ On-Board Recorder
- ❑ Radiator
- ❑ Rear End
- ❑ Reflectors
- ❑ Safety Equipment
  - Fire Extinguisher
  - Flags-Flares-Fusees
  - Spare Bulbs & Fuses
  - Spare Seal Beam
- ❑ Springs
- ❑ Starter
- ❑ Steering
- ❑ Tachograph
- ❑ Tires
- ❑ Transmission
- ❑ Wheels
- ❑ Windows
- ❑ Windshield Wipers
- ❑ Other

TRAILER(S) N0.(S)_____

❑ Brake Connections	❑ Hitch	❑ Tarpaulin
❑ Brakes	❑ Landing Gear	❑ Tires
❑ Coupling Chains	❑ Lights - All	❑ Wheels
❑ Coupling (King) Pin	❑ Roof	❑ Other
❑ Doors	❑ Springs	

Remarks: _____

_____

_____

❑ CONDITION OF THE ABOVE VEHICLE IS SATISFACTORY

Driver's Signature _____

❑ ABOVE DEFECTS CORRECTED
❑ ABOVE DEFECTS NEED NOT BE CORRECTED FOR SAFE OPERATION OF VEHICLE

MECHANIC'S SIGNATURE_____ DATE: _____
OWNING DRIVER'S SIGNATURE_____ DATE: _____

Inspection, Repair & Maintenance Record

VEHICLE IDENTIFICATION	
Make:	Serial Number:
Year:	Tire Size:
Company number/other ID:	Owner, if leased:

DATE	OPERATION PERFORMED, INSPECTION AND/OR REPAIR

VEHICLE SERVICE DUE STATUS REPORT

VEHICLE IDENTIFICATION

Make:	Serial Number:
Year:	Tire Size:
Company No/Other ID:	Owner, if leased:

Date of Inspection	Type of Inspection	Mileage at Time of Inspection	Date Next Inspection Due	Mileage Type of Inspection Due	Inspection Due

Bus Emergency Exits Inspection

Make:	Serial Number:
Year:	Tire Size:
Company No/Other ID:	Owner, if leased:

Inspections are due every 90 days

Operations / Dates Performed	Check Pushout Windows	Check Emergency Doors	Check Emergency Door Lights

ANNUAL VEHICLE INSPECTION REPORT

Unit No.	Vin No.	Make	Model	License No.
Motor Carrier		Inspection Location		
Motor Carrier's Address		Inspection Date	Odometer Reading	

(Inspector must complete both sides of this form)

COMPONENTS INSPECTED

ITEM	Pass	Defect
1 BRAKES		
a. Service brakes	❍	❍
b. Parking brake system		
i. Push rod travel	❍	❍
ii. Lining thickness	❍	❍
c. Brake drums or rotors	❍	❍
d. Brake hoses	❍	❍
e. Brake tubing	❍	❍
f. Low pressure warning device	❍	❍
g. Tractor protection valve	❍	❍
h. Air compressor	❍	❍
i. Electric brakes	❍	❍
j. Hydraulic brakes	❍	❍
k. Vacuum system	❍	❍
2 COUPLING DEVICES		
a. Fifth wheel	❍	❍
b. Pintle hook	❍	❍
c. Safety devices	❍	❍
3 EXHAUST SYSTEM		
a. Any exhaust system determined to be leaking at a point forward of or directly below the driver/sleeper compartment	❍	❍
b. No part of the exhaust system shall be so located as would likely result in burning, charring, or damaging the electrical wiring, the fuel supply, or any combustible part of the motor vehicle	❍	❍
4 FRAME		
a. Frame members	❍	❍
b. Tire and wheel clearance	❍	❍
5 FUEL SYSTEMS AND LINES		
a. Visible leaks	❍	❍
b. Fuel tank filler caps	❍	❍
c. Fuel tank security	❍	❍
6 LIGHTS AND REFLECTORS		
a. Turn signals and lenses	❍	❍
b. 4-way emergency flashers	❍	❍
c. Headlights	❍	❍
d. Clearance lights	❍	❍
e. Stop and tail lights and lenses	❍	❍
f. Reflectors	❍	❍

ITEM	Pass	Defect
7 SAFE LOADING		
a. Protection against shifting cargo	❍	❍
b. Part(s) of vehicle or condition of loading area such that the spare tire or any part of the load or equipment can fall into the roadway	❍	❍
8 STEERING MECHANISM		
a. Steering wheel play	❍	❍
b. Steering column	❍	❍
c. Front axle beam and all steering components other than a steering column	❍	❍
d. Steering gear box	❍	❍
e. Pitman arm	❍	❍
f. Power steering	❍	❍
g. Ball and socket joints	❍	❍
h. Tie rods and drag links	❍	❍
i. Nuts	❍	❍
j. Steering column	❍	❍
9 SUSPENSION		
a. Any u-bolt(s), spring hanger(s), or other axle positioning part(s) cracked, broken, loose, or missing resulting in shifting of an axle from its normal position	❍	❍
b. Spring assembly	❍	❍
c. Torque, radius, or tracking components	❍	❍
10 TIRES		
a. Cuts or blemishes	❍	❍
b. Tread depth	❍	❍
11 VANS AND OPEN-TOP TRAILER BODIES		
a. Upper rail	❍	❍
b. Lower rail	❍	❍
c. Floor cross members	❍	❍
d. Side panels	❍	❍
12 WHEELS AND RIMS		
a. Lock or side ring	❍	❍
b. Wheels and rims	❍	❍
c. Fastners	❍	❍
d. Welds	❍	❍
13 WINDSHIELD WIPERS	❍	❍
14 EMERGENDY EXITS ON BUSES	❍	❍

Inspector's Comments:

_____
_____
_____
_____
_____
_____
_____
_____
_____
_____
_____
_____
_____
_____
_____
_____
_____
_____
_____

INSPECTOR'S QUALIFICATIONS

I, _____, am qualified to perform an annual inspection pursuant to Part 396.19 for the following reasons.

1 I have successfully complete a state or federally-sponsored program
2 I have at least one year of training and/or experience in the following:
   a. Participation in a truck operation and maintenance-training program.
   b. Experience as a mechanic or inspector in a motor carrier maintenance program.
   c. Experience as a mechanic or inspector in truck maintenance at a commercial garage, leasing company, or similar facility.
   d. Experience as a commercial vehicle inspector for a state, provincial, or federal government.

INSPECTOR'S CERTIFICATION

I hereby certify that I have been issued a copy of Appendix G or 49 CFR, Part 396, and that the annual inspection I have performed is accurate and complete, pursuant to the inspection criteria set forth therein.

Signature_____ Date_____

INSPECTOR QUALIFICATIONS –
Certification – 49 CFR – Part 396.19

Motor carriers are responsible for ensuring that individuals performing an annual inspection under 396.19 are qualified as follows:

☐ Understands the inspection criteria set forth in Part 393 and Appendix G, and can identify defective components.

☐ Is knowledgeable of and has mastered the methods, procedures, tools, and equipment used when performing an inspection.

☐ Is capable of performing an inspection by reason of experience, training, or both, and qualifies in one of the following categories (check all that apply):

1. ☐ Successfully completed a State or Federal training program, or has a certificate from a State or Canadian Province that qualifies the person to perform commercial vehicle safety inspection. Specify:_____

or

2. ☐ Have a combination of training or experience totaling at least one year as follows (check all that apply):

   A. ☐ Participation in a truck manufacturer-sponsored training program or similar commercial training program designed to train students in truck operation and maintenance. Where and date:

   _____

   B. ☐ _____ years experience as a mechanic or inspection in a motor carrier maintenance program. Name and date:

   _____

   C. ☐ _____ years experience as a mechanic or inspection in truck maintenance at a commercial garage, fleet leasing company, or similar facility. Name of facility and dates:

   _____

   D. ☐ _____ years experience as a commercial vehicle inspector for a State, Provincial, or Federal Government. Where and dates:

   _____

I certify the above information is true and accurate to the best of my knowledge.

Signature of Mechanic/Inspector_____ Date_____

Signature of Motor Carrier/
Company Employer/Supervisor_____ Date_____

Evidence of Inspector qualification are on file at:_____

BRAKE INSPECTION QUALIFICATIONS

Certification – 49 CFR – Part 396.25

"Brake Inspector" means any employee of a motor carrier who is responsible for ensuring all brake inspections, maintenance, service, or repairs to any commercial motor vehicle, subject to the motor carrier's control, meet the applicable Federal standards.

No motor carrier shall require or permit any employee who does not meet minimum brake inspector qualifications to be responsible for the inspection, maintenance, service, or repairs of any brakes on its commercial motor vehicles.

Minimum Qualifications

☐ Understands and can perform brake service and inspection.

☐ Is knowledgeable of and has mastered the methods, procedures, tools, and equipment necessary to perform brake service and inspection.

☐ Is capable of performing brake service or inspection by reason of experience, training, or both, and qualifies in one of the following categories (check all that apply):

1. ☐ Has successfully completed an apprenticeship program sponsored or approved by a State, Canadian Province, a Federal agency, or labor union, or has a certificate from a State or Canadian Province that qualifies the person to perform brake service or inspections. Specify:

_____

or

2. ☐ Has brake-related training or experience or both, totaling at least one year as follows):

   A. ☐ Participation in a brake maintenance or inspection raining program sponsored by a brake or vehicle manufacturer or similar commercial training program. Where and date:

   _____

   B. ☐ _____ years experience performing brake maintenance or inspection in a motor carrier maintenance program. Name and date:

   _____

   C. ☐ _____ years experience performing brake maintenance or inspection at a commercial garage, fleet leasing company, or similar facility. Name of facility and dates:

   _____

I certify the above information is true and accurate to the best of my knowledge.

Signature of Mechanic/Inspector_____ Date_____

Signature of Motor Carrier/
Company Employer/Supervisor_____ Date_____

Evidence of Inspector qualifications are on file at:_____

On Guard

U.S. Department of Transportation

WITHIN AN INCH OF YOUR LIFE

IF BRAKE SLACK EXCEEDS ONE INCH, YOU COULD BE DRIVING A "KILLER TRUCK".

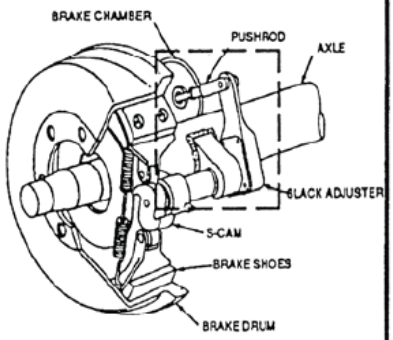

THIS IS THE MOST IMPORTANT INCH OF YOUR LIFE.

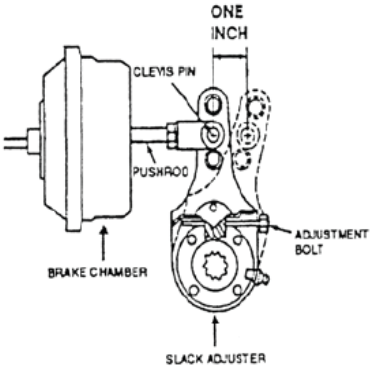

BRAKES SHOULD BE CHECKED BEFORE EACH TRIP AND MORE FREQUENTLY IN HILLY AREAS.

TRUCKERS! Poorly adjusted brakes could cost you time and money with out-of-service violations, jeopardize your safety and that of others due to impaired stopping ability, and even cost you your life. The only way to be sure that your vehicle's brakes are properly adjusted is to physically check each wheel on a regular schedule. It is difficult for you to sense, simply from pedal feel, that your brakes are out of adjustment. Under normal braking conditions, your brakes may respond satisfactorily, but under a *hard* or *panic* stop you may find that you are unable to stop in time.

HOW TO CHECK

Before checking or making adjustments, be sure that your vehicle is parked on a level surface with the wheels blocked, spring brakes released, and the engine shut off. The following measurements are for *Type 30 air chamber brakes only.* For other types, check with your mechanic, supervisor, or manufacturer.

One person method: (1) Pull the chamber pushrod to its limit by hand or by prying with a short pry bar. (2) Measure from the clevis pin to the chamber face at both full retraction and at full extension. The difference between these measurements is the pushrod travel or slack. One-half inch is correct, and the *MAXIMUM ALLOWABLE TRAVEL IS ONE INCH* (one-person method).

Two-person method: Make the same measurements described in the one-person method, but with brakes fully applied and with brakes released. Because of the considerable stretching and bending of various parts when using the two-person method, the *MAXIMUM ALLOWABLE TRAVEL IS TWO INCHES* for Type 30 air chamb.. brakes.

HOW TO ADJUST

Brake adjustment, or "taking up the slack," is done by first making sure the brakes are released, then turning the adjusting bolt on the slack adjuster arm: (1) Depress the spring locking sleeve with a wrench. (2) Tighten the bolt until solid resistance is met. This indicates that the brake linings are touching the drum.

NOTE: Most adjusting bolts require a normal clockwise turn to "set up" the brakes, but some require a counter-clockwise turn. Be alert for any outward movement of the chamber pushrod and slack adjuster arm while the adjustment bolt is being turned. This movement means you are turning in the wrong direction.

(3) Restore running clearance by backing off the adjustment between one-quarter and one-half a turn. Re-check the pushrod travel. Proper adjustment leaves one-half an inch. (4) Check each brake drum or rotor for excessive heat soon after the brakes have been adjusted. An extra-hot brake drum means that you have adjusted the brakes too tightly.

For both this type and other types of brake systems, always check with the manufacturer for proper maintenance and adjustment procedures. If you are not comfortable with these procedures, ask your mechanic or supervisor.

Section 10

Transportation Of Hazardous Material

(49 CFR, Part 397)

Hazardous materials are any substance defined by the Secretary of Transportation as posing an unreasonable risk to health and safety or to property. Hazardous materials fall into one of the following basic classes and divisions.

Explosives 1.1 Explosives 1.2 Explosives 1.3 Explosives 1.4 Explosives 1.5 Explosives 1.6 Flammable Gas, 2.1	Non-Flammable Gas, 2.2 Poison Gas, 2.3 Flammable & Combustible Liquids, 3 Flammable Solids, 4.1 Spontaneously Combustible,4.2 Dangerous When Wet, 4.3 Oxidizer, 5.1	Organic Peroxide, 5.2 Poison Liquid or Solid, 6.1 Infectious Substance, 6.2 Radioactive, 7 Corrosive, 8 Miscellaneous, 9 Consumer Commodities ORM-D

To determine if a material you are transporting is hazardous, contact the shipper that provided the material or see the definitions of these materials in the hazardous materials regulations.

A motor carrier that transports a hazardous material must comply with the Federal Hazardous Material Regulations, 49 CFR 100-180. These regulations include requirements for registration, training, shipping papers, labels, placards, and packages. In addition, there are additional requirements in the Federal Motor Carrier Safety Regulations, including insurance requirements, operational restrictions, Commercial Drivers' License endorsements, routing, parking, attendance requirements for hazardous materials, and security plans.

To obtain additional information about hazardous material regulations, contact:

- FMCSA - 1-800-467-4922 / (360) 753-9875
- FMCSA - phmsa.dot.gov/hazmat
- FMCSA - www.fmcsa.dot.gov/safety-security/hazmat/hm.htm
- WSP - (360) 596-3800
- PHMSA - www.phmsa.dot.gov/hazmat 1-800-467-4922

Biohazardous/Biomedical Waste Shipping Paper

Effective September 5, 2006, all hazardous waste carriers must use the Uniform Hazardous Waste Manifest Form #8700-22 and 22a. This form may be obtained from any authorized EPA registered printers.

NOTE: This publication not intended for sale.

Section 11

Commercial Vehicle Safety Alliance (CVSA)

CVSA members include the United States, Canada, Mexico, and associated industry members. The Washington Utilities and Transportation Commission and the Washington State Patrol are members of CVSA.

The goals of CVSA are:

- To bring about overall improvement in commercial vehicle and hazardous materials transportation safety.
- To avoid duplication of inspection efforts by the various jurisdictions.
- To minimize delays for the operating industry.
- To increase the number of on-highway inspections.
- To improve the safety of equipment and drivers operating on our highways.

CVSA Inspection Levels:

- Level 1 - North American Standard (NAS) Inspection*
- Level 2 - Walk-Around Driver/Vehicle Inspection
- Level 3 - Driver/Credential Inspection
- Level 4 - Special Inspections
- Level 5 - Vehicle-Only Inspection*
- Level 6 - Enhanced North American Standard (NAS) Inspection for Transuranic Waste and Highway Route Controlled Quantities (HRCQ) of Radioactive Material*
- Level 7 - Jurisdictional Mandated Commercial Vehicle Inspection

*Only vehicles passing Levels 1, 5, and 6 inspections receive CVSA decals.

- A vehicle that does not pass the CVSA inspection will not receive a CVSA decal and may be placed out of service, in accordance with the North American Standard Out-of-Service Criteria.
- Drivers may be placed out of service for various driver violations, such as logbook, licensing, etc.

Note: Copies of NAS out-of-service criteria used by all CVSA-affiliated states, provinces, and agencies are available to the public by contacting the address listed below.

Commercial Vehicle Safety Alliance
6303 Ivy Lane
Suite 310
Greenbelt, Maryland 20770-6319
Phone: (301) 830-6143
Fax: (301) 830-6144
cvsahq@cvsa.org
www.cvsa.org

NORTH AMERICAN STANDARD INSPECTION PROCEDURE

1. **PREPARE THE VEHICLE AND DRIVER**
   Instruct the driver to remain at the controls, and turn the engine off. (Allow cool down time for turbo-charged engines.)
   Place chock blocks in position beginning on the driver's side, one in front and one behind the drive axle tires or between the axles, and advise the driver that the wheels have been chocked.
   Have the driver place the transmission in neutral and release all brakes.
   Advise the driver in the use of hand signals. (Lamps and brakes.)

2. **CHECK DRIVER'S REQUIREMENTS**
   - DRIVER LICENSE (391.11)
     Check for expiration date, birth date, status check.
   - MEDICAL CERTIFICATE (391.41)
     Check for expiration date, and make sure form is completed. Note the stated physical limitations.
   - RECORD OF DUTY STATUS (395.8) (395.3)
     Updated to last change of duty status, today's date, legible handwriting, past 7 days recorded, mileage, drive time, on duty time, vehicle numbers, carrier name, signature.
     "Remarks" section may include locations of duty status change, unusual circumstances that delay the trip, and shipping document numbers of the name of the shipper. Check for written authorization for interactive electronic recording devises, if applicable.
   - DRIVER VEHICLE INSPECTION REPORT (396.11)
     Check for I.D. number of vehicle(s) inspected, record of defects found (if any), and signatures.
   - SHIPPING PAPERS/BILL OF LADING
     Check for listings of hazardous materials indicated by the first entry, an "X" in the H.M. column, or a contrasting color. Papers must be within arm's reach and visible.
   - SEAT BELT (392.16)
     Check for condition and usage.
   - ALCOHOL AND DRUGS (392.4) (392.5)
     Check for violations.

3. **CHECK FOR PRESENCE OF HAZARDOUS MATERIALS**
   - PLACARDS
     Check for the presence of placards, but use caution even if none are posted.
   - LEAKS, SPILLS, UNSECURE CARGO
     When hazardous materials are present, be ESPECIALLY careful with leaks, spills, or unsecure cargo.
   - MARKINGS
     Cargo tanks and portable tanks will display markings on an orange panel or placard. They indicate the I.D. number of the hazardous materials. There are exceptions to this rule.
   - LABELS
     When containers are visible, labels will identify the hazardous materials. There are exceptions to this rule.

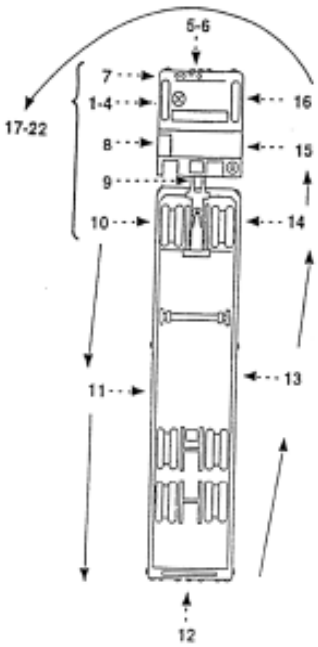

4. **INSIDE CAB**
   - STEERING LASH
     Measure amount of steering lash and compare wit Out-of-Service Criteria.
   - STEERING COLUMN
     Check for insecure attachment

5. **FRONT OF TRACTOR**
   - HEAD LAMPS, TURN SIGNALS, EMERGENCY FLASHERS (393.25)
     Check for improper color and operation.
   - WINDSHIELD WIPERS (393.78)
     Check for improper operation. Two wipers are required unless one can clean the driver's field of vision.
   - WINDSHIELD (393.60)
     Check for cracks or other damage. Check for decals of stickers in field of vision.

6. **STEERING AXLE**

   INFORM THE DRIVER THAT YOU ARE GOING UNDER THE VEHICLE, AND TO LISTEN FOR YOUR INSTRUCTIONS

   - STEERING SYSTEM (BOTH SIDES)
     Check for loose, worn, bent, damaged, or missing parts. Instruct the driver to rock the steering wheel and check key components: front axle beam, gear box, pitman arm, drag link, tie rod, tie rod ends).
   - FRONT SUSPENSION (BOTH SIDES)
     Check for indications of misaligned, shifted, or cracked springs, loosened shackles, missing bolts, spring hangers unsecure at frame, and cracked of loose U-bolts. Also check for unsecure axle positioning parts and signs of axle misalignment.
   - FRONT BRAKES (BOTH SIDES (393.48)
     Check for missing, malfunctioning, loose, contaminated, or cracked parts on the brake system, such as brake drums, shoes, rotors, pads, linings, brake chambers, chamber mounting, push rods, slack adjusters.
     Check for "S" cam flip over. Be alert for audible air leaks around brake components and lines.
     With the brakes released, mark the brake chamber push rod at a point where the push rod exits the brake chamber. Mark the pus rods on both sides at this time. All push rods will be measured in ITEM 18.
   - FRONT AXLE
     Check for cracks, welds, and obvious misalignment.
   - FRAME and FRAME ASSEMBLY
     Check for cracks, or any defect that may lead to the collapse of the frame.

7. **LEFT FRONT SIDE OF TRACTOR**
   - LEFT FRONT WHEEL AND RIM
     Check for cracks, unseated locking rings, broken or missing lugs, studs, or clamps, bent or cracked rims, "bleeding" rust stains, loose or damaged lug numb, and elongated stud holes.
   - LEFT FRONT TIRE (393.75)
     Check for improper inflation, serious cuts, or bulges. Check tread wear and measure major tread groove depth. Inspect sidewall for defects. Check for exposed fabric or cord. Radial and bias tires should not be mixed on the steering axle.

8. **LEFT SADDLE TANK AREA**
   - LEFT FUEL TANK(S) (393.65)
     Check for unsecure mounting, leaks or other damage. Verify that the fuel crossover line is secure. Check for unsecure cap(s).
   - TRACTOR FRAME (393.201)
     Check frame rails and cross members on the tractor just behind the cab, looking for cracks, bends, or excessive corrosion.
   - EXHAST SYSTEM (393.83)
     Check for unsecure mounting, leaks (under the car, exhaust contacted by fuel or aid lines or electrical wires.
     Check for carbon deposits around seams and clamps.

9. **TRAILER FRONT**
   - AIR & ELECTRICAL LINES (393.28)
     Lines between tractor and trailer should be suspended and fee of tangles and crimps. They should have sufficient slack to allow the vehicle to turn. Inspect the connections for proper seating. Listen for audible air leaks.
   - FRONT END PROTECTION (393.106)
     Check for height requirements. (Note exceptions.)

10. **LEFT REAR TRACTOR AREA**
    - WHEELS, RIMS, & TIRES
      Inspect as described in ITEM 7.
      Check inside tire of dual for inflation and general condition. Tires should be evenly matched (same circumference) on dual wheels.
      Without placing yourself between the tires on tandem axles, check for debris
    - between the tires.

LOWER FIFTH WHEEL (393.70)
Check for unsecure mounting to the frame or any missing or damaged parts.
Check for any visible space between the upper and loser fifth wheel plates.
Verify that the locking jaws are around the shank and not the head of the kingpin.
Verify that the release lever is seated properly, and that the safety latch is engaged.

- UPPER FIFTH WHEEL
  Check for any damage to the weight bearing plate and its supports on the trailer. Check kingpin condition.
- SLIDING FIFTH WHEEL
  Check for proper engagement of locking mechanism (teeth fully engaged on rail).
  Check for worn or missing parts, making sure that the position does not allow the tractor frame rails to contact the landing gear during turns.

INFORM THE DRIVER THAT YOU ARE GOING UNDER THE VEHICLE. ENTER THE UNDERCARRIAGE IN VIEW OF THE DRIVER.

- SUSPENSION (BOTH SIDES)
  Inspect as described in ITEM 6. Check for deflated of leaking air suspension systems.
- BRAKES (BOTH SIDES)
  Inspect brakes as described in ITEM 6.
  With brakes released, mark the push rods.

11. **LEFT SIDE OF TRAILER**
    - FRAME AND BODY
      Check for cracks and any indication leading to collapse of the frame.
    - CARGO SECUREMENT (393.100)
      Check for improper blocking or bracing and unsecure chains or straps. Verify end gates are secured in stake pockets. Check tarp or canvas.
    - WHEELS, RIMS, & TIRES
      Inspect as described in ITEM 7.
    - SLIDING TANDEM
      Check for misalignment and position. Look for damaged, work, or missing parts. Check locking mechanism, teeth of locking mechanism must fully mesh with those of the rail secured to the frame.

INFORM THE DRIVER THAT YOU ARE GOING UNDER THE VEHICLE. ENTER THE UNDERCARRIAGE IN VIEW OF THE DRIVER.

- SUSPENSION (BOTH SIDES)
  Inspect as described in ITEM 8.
- BRAKES (BOTH SIDES)
  Inspect as described in ITEM 6. With brakes released, mark push rods.

12. **REAR OF TRAILER**
    - TAIL, STOP, & TURN LAMPS & EMERGENCY FLASHERS
      Check for improper color and operation.

CARGO SECUREMENT
Inspect as described in ITEM 11.
Also check tailboard security. Verify end gates are secured in stake pockets, and

- rear doors are closed.
  Check both sides of trailer to insure protection of cargo from shifting or falling.

13. **RIGHT REAR OF TRAILER**
    - CHECK ALL ITEMS AS ON LEFT SIDE.
14. **RIGHT REAR TRACTOR AREA**
    - CHECK ALL ITEMS AS ON LEFT SIDE.
15. **RIGHT SADDLE TANK AREA**
    - CHECK ALL ITEMS AS ON LEFT SIDE.
16. **RIGHT FRONT SIDE OF TRACTOR**
    - CHECK ALL ITEMS AS ON LEFT SIDE.
17. **BRAKE ADJUSTMENT CHECK**

INFORM THE DRIVER THAT YOU ARE GOING UNDER THE VEHICLE. ENTER THE UNDERCARRIAGE IN VIEW OF THE DRIVER.

- MEASURE PUSH ROD TRAVEL (ALL BRAKES)
  While the brakes are applied, move around the vehicle and measure the distance of push rod travel at each chamber.
  Write down each push rod measurement, and compare them to the Out-of-Service Criteria for the appropriate size and type of brake chamber.
  Again, listen for leaks as you move around the vehicle.

18. **FIFTH WHEEL MOVEMENT CHECK**
    - USE CAUTION
      If conducted improperly, this method of checking for fifth wheel movement can result in serious damage to the vehicle. Use caution and instruct the driver carefully.
    - PREPARE THE VEHICLE AND DRIVER
      Have the driver put the vehicle in gear, release the service brakes, and apply the trailer brakes.
      Remove the wheel chocks and have the driver start the vehicle. Carefully explain the procedure to the driver. Tell the driver to GENTLY rock the tractor as you watch the fifth wheel.
    - CONDUCT THE PROCEDURE
      As the tractor rocks, watch for movement between the mounting components and frame, pivot pin, and bracket, and the upper and lower fifth wheel halves.
19. **AIR LOSS RATE**
    - WHEN TO CONDUCT THE TEST
      If you heard an air leak at any point in the inspection, you should now check the vehicle's air loss rate.

CONDUCT THE PROCEDURE
Have the driver run the engine at idle, then apply and hold the service brake.
Observe the air reservoir pressure gauge on the dash. Have driver pump the pressure down to 80 psi. Compressors do not activate until system pressure drops below a certain level. At about 80 lbs. most compressors should be operating.
Air pressure should be maintained or

- increase. A drop in pressure indicates a serious air leak in the brake system, and the vehicle should be placed out of service.

20. **LOW AIR PRESSURE WARNING DEVICE**
    - TEST THE WARNING DEVICE
      Instruct the driver to pump the air down until the low air pressure device activates.
      Observe the gauges on the dash. The low air pressure warning must activate at a minimum of ½ the compressor governor cut out pressure, approximately 55 psi
21. **TRACTOR PROTECTION VALVE**
    This procedure will test both the tractor protection valve and the trailer emergency brakes.
    - CONDUCT THE TEST
      Instruct the driver to release the emergency brakes by pushing in the dash valves.
      Break the supply emergency line at the hose couplers between the tractor and the trailer. When the line is disconnected, a blast of air will be noticed. At this point, the emergency brakes on the trailer should set up.
    - OBSERVE THE DASH GAUGE
      Air will leak from the tractor side of the line until the pressure in the tractor's system drops to the 20-45 psi range. At this point, the sir loss should stop, isolating the tractor air system.
      A loss of air in the tractor system below the 20-25 psi range indicates a malfunctioning tractor protection valve. If the trailer brakes do not set up when the line is disconnected, there is a problem with the trailer emergency brakes.
22. **COMPLETE THE INSPECTION**
    - COMPLETE PAPER WORK
      Complete inspection forms and other paperwork, as required.
    - CONCLUDE WITH THE DRIVER
      Explain any violations or warnings to the driver. Take appropriate enforcement action, if necessary.

APPLY CVSA DECAL
Apply a CVSA decal on all vehicles that

DIFFERENCES IN THE LEVELS OF INSPECTION

Inspection Items	Level 1	Level 2*	Level 3	Level 4	Level 5**
1. Drivers license	✔	✔	✔		
2. Medical examiner's certificate and waiver (if applicable)	✔	✔	✔		
3. Alcohol and drugs	✔	✔	✔		
4. Drivers log (hours-of-service and duty status)	✔	✔	✔		
5. Seatbelt system	✔	✔	✔		✔
6. Periodic inspection documentation	✔	✔	✔		✔
7. Brake system	✔	✔			✔
8. Coupling devices	✔	✔			✔
9. Exhaust system	✔	✔			✔
10. Frame	✔	✔			✔
11. Fuel system	✔	✔			✔
12. Brake, head, tail lamps, turn signals, and lamps on projecting loads	✔	✔			✔
13. Safe loading of cargo	✔	✔			✔
14. Steering mechanism	✔	✔			✔
15. Suspension	✔	✔			✔
16. Tires	✔	✔			✔
17. Wheels, rims, and hubs	✔	✔			✔
18. Van and open-top trailer bodies	✔	✔			✔
19. Windshield wipers	✔	✔			✔
20. Emergency exits (for buses)	✔	✔			✔
21. Hazardous materials requirements (as applicable)	✔	✔	✔		✔
22. One time special inspection of a particular item				✔	
CVSA decal issued for "Pass" inspection (no violations/defects found in items 7-20)	✔				✔

Notes:

* Level 2 inspection only includes those items that can be inspected without physically getting under the vehicle

** Level 5 inspections are conducted without a driver present

Section 12

Safety Compliance Review

A terminal safety audit is a comprehensive review of a motor carrier's compliance with all applicable federal and state safety regulations. This involves a review of the regulations with company management, review of documents relating to accidents, drivers and equipment, as well as inspection of equipment at the carrier's terminal.

Companies may receive a terminal safety audit for one of the following reasons:

- To obtain a current safety rating
- Safety complaints
- Upon carrier request
- Routine Compliance Reviews
- High accident ratio
- High vehicle defect ratio
- Previous "Conditional" and/or "Unsatisfactory" safety rating

What can a carrier expect when contacted for a terminal safety audit? An investigator will contact the carrier official and make an appointment to do the terminal audit. In addition, the investigator will provide the official with information regarding the types of records and vehicles that will be inspected during the course of this safety review.

The following parts and subparts contained in Title 49 CFR, will be inspected for compliance:

- **Part 40 – Procedure for Transportation Workplace Drug and Alcohol Testing Programs**
- **Part 380 – Special Training Requirements**
- **Part 382 -- Controlled substance and alcohol use and testing.** (Applies to every person who operates a commercial motor vehicle in interstate or intrastate commerce and who is subject to commercial driver's license (CDL) requirements.)
- **Part 383 -- Commercial Driver's License Standards**
- **Part 385 -- Safety Fitness Procedure**
- **Part 387 – Minimum Levels of Financial Responsibility for Motor Carriers and/or Intrastate Insurance Requirements**
- **Part 390 – Accident Register**
- **Part 391 -- Qualifications of Drivers**
- **Part 392 -- Parts and Accessories Necessary for Safe Operations**
- **Part 395 -- Hours of Service for Drivers** (Or Washington Administrative Codes for certain drivers hours of service regulations.)
- **Part 396 -- Inspection, Repair and Maintenance**
- **Part 397 -- Transportation of Hazardous Materials; Driving and Parking Rules**
- **Parts 100 through 177 -- Hazardous Materials Regulations**

NOTE: This publication not intended for sale.

Upon completion of a UTC safety compliance review, the carrier will receive an intrastate safety rating. This rating will consist of one of the following:

- **Satisfactory**
- **Conditional**
- **Unsatisfactory**

Carrier officials may be requested to submit a compliance letter within 15 days detailing corrective action the carrier will take to correct violations found. Companies may be rechecked at a future date to ensure compliance.

Safety Profiles

A carrier's safety profile is generated upon completion of a Compliance Review. The carrier profile consists of the following:

- Carrier Safety Rating
- Current Insurance Status

Carrier profiles are maintained by the UTC on the following industries:

- Charter/Excursion Companies (WAC 180-20-031 requires school districts to obtain a carrier profile from the UTC before contracting with a Charter Bus/Excursion Bus company)
- Auto Transportation Companies
- Private Non-profit Passenger Carriers
- Household Goods Carriers
- Solid Waste Carriers

To obtain a carrier profile from the UTC, contact:

Washington Utilities and Transportation Commission
(360) 664-1244

To obtain an interstate carrier safety profile, contact:

Federal Motor Carrier Safety Administration
(360) 753-9875

UTC SAMPLE CARRIER PROFILE REPORT

COMPANY NAME: John Doe Charters LLC

CERTIFICATE NO.: CH-000

INSURANCE: Valid insurance on file with WUTC

SAFETY RATING: Satisfactory

Carrier profiles are effective for two years from the last inspection.

- Last Inspection Performed: 01/01/01
- Carrier Profile Effective Through: 02/02/02

Profile Origin Date: 01/01/01

Section 13

Suggestions For Establishing An Effective Safety Program

DEVELOPING A RISK MANAGEMENT OR SAFETY PLAN

The cornerstone of a good company safety effort is a risk management or safety plan. This written document sets out your company policy and procedures. It need not be a complicated document, but something that conveys how your company handles the hiring process, keeps vehicles in good condition, and spells out rules of conduct for employees.

Even an owner-operator will benefit from written procedures such as those describing the vehicle inspection, repair, and maintenance process.

There are many benefits for coming up with a written safety plan. It puts all of your employees on the same playing field and lets them know what is acceptable and non-acceptable behavior. It answers questions about what should be done in certain situations such as qualifying drivers, accident response, or time intervals for preventive maintenance.

Safety plans could help to limit your liability in a lawsuit as it details your commitment to safety and shows that you will enforce your own policies to keep your operation safe.

There are four main points that you should address in your safety plan:

1. Showing how your drivers are qualified to operate commercial vehicles.
2. Describing how your vehicles are maintained in safe operating condition.
3. Documenting how your drivers are complying with the maximum hours of service requirements.
4. Describing how drivers and other employees receive a timely warning for violating the FMCSRs and setting forth a progressive disciplinary policy.

You will have substantial latitude in how you comply with some of the federal motor carrier safety regulations (FMCSRs). If you can simplify the regulations to meet your needs, you will more easily understand them and get your company into substantial compliance quickly.

Let your safety records do the talking … beginning with a strong foundation in a safety plan! Remember, your fleet is unique, so when you are looking at guidelines for a general safety plan outline, keep that in mind and work these four major sections around your operations.

The Introduction and Policy – Part 1

Start your safety plan with a brief outline of your operation. Describe what you do and some background on the company. Try to include your company mission statement, if you have one. Add the responsibilities of management and the commitment towards safety throughout the organization. Show who the persons responsible for safety are, and include a brief description of their duties and qualifications. You should also point out how you communicate with other employees (i.e., safety meetings, orientations, on-the-job training, daily briefings or contacts, etc.) for the purpose of forwarding information on safety policies and procedures to be used.

The Hiring, Training, and Retention Process for Employees – Part 2

This section will provide a description of how you locate and recruit potential employees and the minimum requirements that your have set for selecting a driver.

Your orientation of new employees should be found in this part. Describe what you do to pass along company policies and procedures, work rules, what is your on-going communication policy with employees.

If you have on-the-job or formal training, include that information in this section. Show how training, on-going courses, meetings, or other safety-related matters are addressed and planned.

Once you have hired an employee, you should strive to retain them because you have a big investment just in the hiring and orientation process itself. Describe what the company does to retain drivers, including incentives, benefits, and employee recognition programs.

Be sure to address non-driving positions such as dispatchers or mechanics.

Include information on some of the required records that are kept on employees (i.e., driver qualification files, controlled substance/alcohol testing, time records/hours of service, disciplinary procedures). Explain their intended use and show who has control of them.

Equipment Inspection, Repair and Maintenance – Part 3

This part of the safety plan discusses your efforts to effectively manage equipment selection, inspection, repair, and maintenance.

You can start by describing the equipment that you use and its intended use. Does the equipment fit the need?

Describe briefly the process for routine vehicle inspections to ensure that your equipment is operating at levels you have deemed necessary. This should include the requirements for pre-trip and post-trip inspections as well as periodic inspections.

You should describe the program you use to ensure that routine maintenance is performed on schedule and according to accepted industry practices. Make notations of the recommended service intervals and what work is normally performed during each type of service. Many motor carriers use manufacturer's specifications or a time/mileage interval based on the type of operations.

One of the most important parts of the safety plan will be the discussion of what processes and procedures your company employs to ensure that any necessary repairs are properly made in accordance with your own, or industry, standards. In other words, if a driver reports a defect to equipment, you need to show that is was repaired. Show the communication between the driver, mechanic, and management in this process. You should also describe the programs for routine maintenance and routine vehicle inspection, including processes and procedures that will be used for owner-operators. **Remember, if the repair or service was not documented – it wasn't done!**
Note the qualifications or minimum standards for your annual inspectors and brake inspectors. Your mechanics and outside vendors need to be qualified to be working on your commercial motor vehicle.

Close this part of the plan with a complete discussion of the records that are maintained on each vehicle describing the inspection, repair, and maintenance process. This would include what goes into the maintenance record, the driver/vehicle inspection report process, the requirement for a periodic (annual) inspection, and how results of roadside or terminal inspections performed by law enforcement or regulatory agencies are handled.

Management Systems – Part 4

Management personnel or owners should take the lead in ensuring that the safety performance of the fleet is periodically assessed, evaluated, and improved where needed. You should be able to document how you evaluate and demonstrate compliance with the FMCSRs.

In this part of the safety plan, discuss how you measure compliance in the following areas:

- **Hours of service.** Show that your drivers are complying with the hours-of-service requirements. Make sure a competent person is monitoring your records to prevent hours violations or form and manner errors. Discuss what the company does to combat driver fatigue (i.e., scheduling, training, off-duty time, etc.)
- **Qualified drivers.** Discuss how you periodically monitor or audit your driver qualification files to make sure they are current and your drivers are properly qualified.
- **Equipment operation.** Indicate how your inspection, repair, and maintenance procedures are set up. Is management actively involved in this process and are you keeping track of repairs to determine if your maintenance intervals and equipment specifications are up to par?
- **Monitoring/self-auditing.** Show what the company is doing to ensure compliance with the regulations. Provide examples of your monitoring process and show how often self-audit or assessments are performed. This setup can give you early warning of violations of company policies/procedures or of the FMCSRs. Don't get yourself in a position where you rely on law enforcement or regulatory authorities to perform this task for you.

Management should use all tools available to make a fair assessment of your company safety program. You can review and analyze accident data available from states, police agencies, or insurance companies to detect trends in crash causes. Consider setting up an internal accident review committee.

You can compare your company with others in the industry. Obtain a copy of your federal motor carrier safety profile and compare your operation with other similar companies in your industry. **Are your crash rates, out-of-service ratios, or violation numbers below the national average?**

If you aren't actively managing the drivers of vehicle operations on a daily basis, delegate someone in your organization that is responsible for the safety effort. Make your drivers, dispatchers, mechanics, and other personnel accountable for their actions. Demonstrate how changes in your safety efforts are implemented and following through with consequences and enforcement procedures for noncompliance.

Performing a review or self-audit of your operations on a regular basis can shed light on what you are doing right and what can be changed to get your company into compliance with the safety regulations. Make it a working tool – one that will work to make your operation safe and save you money through less downtime, fewer crashes, and high employee morale. People enjoy working for companies that put safety in the forefront. It shows that you are a responsible employer and that you really care about the health and welfare of your workers.

NOTE: This publication not intended for sale.

Section 14

Marking of Vehicles

The following are the marking requirements for vehicles permitted by the UTC and operated exclusively in **Intrastate** commerce. For interstate marking requirements, refer to Title 49, CFR, Part 390.21.

Household Goods Carriers (WAC 480-15-560 (2))

- Carrier's permit name and number.
- Displayed on both the driver and passenger doors of the power unit.
- Clearly legible.
- No less than three inches high.
- In colors that contrast with the background color.
- Permanent markings. Carriers may use temporary markings for leased vehicles.
- Carriers with both intrastate and interstate authority must display either the UTC permit number, federal permit number, or both on the power unit.

Common Carriers (RCW 81.80.305)

- Carrier's permit name or number, or both.
- Displayed on each side of each power unit.
- Clearly legible.
- Letter no less than three inches high.
- Colors must contrast with the surrounding body panel.
- Permanent markings. Leased vehicles may display either permanent markings or placards on the driver and passenger doors of the power unit.
- Common carrier holding both intrastate and interstate authority may display either the USDOT certificate number, UTC permit number, or both.

Solid Waste Carriers (WAC 480-70-206)

- Carrier's certificate name and/or registered trade name, and certificate number.
- Displayed on each side of the vehicle.
- Clearly legible.
- Permanent markings except for leased or substitute vehicles.

Passenger Transportation Companies (WAC 480-30-231)

- Carrier's certificate holder's name or registered trade name, and certificate number.
- Displayed on each side of the vehicle.
- A destination on each side of the vehicle.
- A destitution sign is required for vehicles operating a scheduled, regular route service.
- Company identification or unit number.
- All identifications must be clearly legible, conspicuous, and of a size that is easily readable.
- Permanent markings except for leased or substitute vehicles.

Private, Nonprofit Transportation Providers (WAC 480-31-110)

- Registered provider name and certificate number.
- Displayed on the driver and passenger side of the vehicle.
- Clearly legible.
- Letters no less than three inches high.
- Displayed in a color that contrasts with the surrounding body panel.
- Permanent markings.
- Leased vehicles may display either permanent markings or placards on the driver and passenger sides of the vehicle.
- Providers holding both intrastate and interstate authority may display either the USDOT certificate number, UTC certificate number, or both.
- When the name of the provider would create an embarrassment to the person with special transportation needs, the name of the provider may be omitted when authorized by a letter from the secretary of the UTC.

Section 15

Bus Operations

WAC 392-144-040, Application to contractors.

(1) Every contract between a school district and a private school bus contractor for pupil transportation services shall provide for compliance with the requirements of this chapter and establish the responsibility of the contractor or school district, or both, to assure compliance with such requirements.

(2) Each driver employed by a private school bus contractor under contract with a school district to provide pupil transportation services shall meet the requirements of this chapter, and shall be subject to the denial, suspension, and revocation of authority to operate a motor vehicle under this chapter.

(3) Every contract between a school district and a charter bus carrier or excursion carrier, or subcontracted carrier shall require a carrier profile report indicating a satisfactory rating from the Washington utilities and transportation commission before any service is provided. No driver under this subsection shall have unsupervised access to children. Supervision of children under this subsection shall be provided by a responsible employee of the school district.

CONFIGUIRING EMERGENCY EXITS ON BUSES

All emergency exits must be marked with:

- **Clearly legible signs indicating exit and method to open.**
- **The words "emergency door" or "emergency exit" @ least one inch high.**
- **Refer to the Emergency Exit Worksheet to determine bus exit space requirements for buses.**

Emergency Exit Worksheet

METHOD 1: WORKSHEET TO DETERMINE COMPLIANCE WITH BUS EXIT SPACE REQUIREMENTS (FOR BUSES MANUFACTURED AFTER SEPTEMBER 1, 1973)

I. CALCULATE TOTAL EMERGENCY EXIT SPACE REQUIRED:

A. Number of mfg.-designated seating positions, including driver		_____	
B. Multiply by 67 sq. in. per seat	X	67	sq. in.
C. Equals total emergency exit space required	=	_____	sq. in.

II. CALCULATE MINIMUM 40% REQUIRED FOR EACH SIDE:

A. Total exit space required (from line IC)		_____	sq. in.
B. Multiply by 40%	X	.4	
C. Equals exit space required on <u>each side</u> of bus	=	_____	sq. in.

III. CALCULATE EXISTING EXIT SPACE ON BUS:

A. LEFT SIDE:			
____ doors x 536 sq. in. for each		_____	sq. in.
+ ____ exit windows x *_____ (max 536) for each	+	_____	sq. in.
**Left subtotal	=	_____	sq. in.
B. RIGHT SIDE:			
One front entry door		536	sq. in.
+ ____exit windows x *_____ (max 536) for each	+	_____	sq. in.
**Right subtotal	=	_____	sq. in.
C. REAR / ROOF EXITS:			
Rear exit door/window (if any, enter 536)		_____	sq. in.
+ ____roof hatches x * _____ (max 536) for each	+	_____	sq. in.
Rear/roof subtotal	=	_____	sq. in.
D. TOTAL EXIT SPACE PROVIDED (Add three subtotals)	=	_____	sq. in.

IIID MUST BE EQUAL TO OR GREATER THAN LINE IC.

*Enter actual size of unobstructed exit when fully opened. maximum 536.
**Must be greater or equal to line IIC.

U.S. Department
of Transportation

**Pipeline and
Hazardous Materials Safety
Administration**

400 Seventh Street, S.W.
Washington, D.C. 20590

DOT GUIDANCE FOR THE SAFE TRANSPORTATION OF MEDICAL OXYGEN FOR PERSONAL USE ON BUSES AND TRAINS

The Department of Transportation recommends that bus and train operators take the following precautions to assure that medical oxygen being transported for passengers' personal use is handled and transported safely:

FOR TRANSPORTATION IN THE PASSENGER COMPARTMENT

- Only transport oxygen in a cylinder maintained in accordance with the manufacturer's instructions. The manufacturer's instructions and precautions are usually printed on a label attached to the cylinder.

- Before boarding, inspect each cylinder to assure that it is free of cracks or leaks, including the area around the valve and pressure relief device. Listen for leaks; do not load leaking cylinders on the bus or train. Visually inspect the cylinders for dents, gouges or pits. A cylinder that is dented, gouged, or pitted should not be transported.

- Limit the number of cylinders to be transported on board the vehicle to the extent practicable.

- Except in emergency situations, the bus or rail operator should consider limiting the number of passengers requiring medical oxygen.

- Cylinders used for medical oxygen are susceptible to valve damage if dropped. Handle these cylinders with care during loading and unloading operations. Never drag or roll a cylinder. Never carry a cylinder by the valve or regulator.

- Do not handle oxygen cylinders or apparatus with hands or gloves contaminated with oil or grease.

- Secure each cylinder to prevent movement and leakage. "Secured" means the cylinder is not free to move when the vehicle or train is in motion. Each cylinder should be equipped with a valve protection cap.

- Never store or secure oxygen cylinders or other medical support equipment in the aisle. Make sure that the seating of the passenger requiring oxygen does not restrict access to exits or use of the aisle.

- Since the release of oxygen from a cylinder could accelerate a fire, secure each cylinder away from sources of heat or potential sparks.

- Under **no** circumstances should smoking or open flames (cigarette lighter or matches) be permitted in the passenger compartment when medical oxygen is present.

- When you reach your destination, immediately remove all cylinders from the bus or train.

FOR TRANSPORTATION IN THE CARGO COMPARTMENT

- Place each cylinder in a box or crate or load and transport in an upright or horizontal position.

- Valves must be protected against damage, except when in use.

- Secure each cylinder against movement.

- The total weight for oxygen cylinders permitted in a bus cargo compartment is 45 kg (99 lbs). A carrier may elect to transport up to 200 kg (440 lbs) in the cargo compartment if the oxygen cylinders are necessary to protect the health and safety of the passengers. However, we strongly recommend limiting the total weight of the cylinders to 45 kg (99 lbs) except under extraordinary circumstances.

- Oxygen cylinders offered for transportation and transported in rail cars on a passenger train may not exceed 34 lbs (75 kg) gross weight per cylinder.

For further information, contact PHMSA's Hazardous Materials Information Center at 1-(800) 467-4922.

Robert A. McGuire
Associate Administrator for Hazardous Materials Safety

June 30, 2006

Section 16

Record Keeping Requirements of the Federal Motor Carrier Safety Regulation

CFR 49, Part 390.31, Copies of records or documents.

(a) All records and documents required to be maintained under this subchapter must be preserved in their original form for the periods specified, unless the records and documents are suitably photographed and the microfilm is retained in lieu of the original record for the required retention period.

(b) To be acceptable in lieu of original records, photographic copies of records must meet the following minimum requirements:

(b)(1) Photographic copies shall be no less readily accessible than the original record or document as normally filed or preserved would be and suitable means or facilities shall be available to locate, identify, read, and reproduce such photographic copies.

(b)(2) Any significant characteristic, feature or other attribute of the original record or document, which photography in black and white will not preserve, shall be clearly indicated before the photograph is made.

(b)(2) Any significant characteristic, feature or other attribute of the original record or document, which photography in black and white will not preserve, shall be clearly indicated before the photograph is made.

(b)(3) The reverse side of printed forms need not be copied if nothing has been added to the printed matter common to all such forms, but an identified specimen of each form shall be on the film for reference.

(b)(4) Film used for photographing copies shall be of permanent record type meeting in all respects the minimum specifications of the National Bureau of Standards, and all processes recommended by the manufacturer shall be observed to protect it from deterioration or accidental destruction.

(b)(5) Each roll of film shall include a microfilm of a certificate or certificates stating that the photographs are direct or facsimile reproductions of the original records. Such certificate(s) shall be executed by a person or persons having personal knowledge of the material covered thereby.

(c) All records and documents required to be maintained under this subchapter may be destroyed after they have been suitably photographed for preservation.

(d) Exception. All records except those requiring a signature may be maintained through the use of computer technology provided the motor carrier can produce, upon demand, a computer printout of the required data.

The following table summarizes the recordkeeping requirements of the Federal Motor Carrier Safety Regulations under 49 CFR Parts 40, 382, 383, 387, and 390-399. See also §390.29 for general recordkeeping requirements, and §390.31 for information concerning photocopies.

TOPIC	DOCUMENT(S) TO BE RETAINED	RETENTION PERIOD	RETENTION LOCATION
Drugs & Alcohol (Parts 40 and 382)	Records related to the education and training of: • breath alcohol technicians (BATs), • screening test technicians (STTs), • supervisors, and • drivers. Required documentation includes: • Materials on drug and alcohol awareness, including a copy of company policy • Documentation of compliance with requirement to provide drivers with educational material, including driver's signed receipt of materials • Documentation of supervisor training • Documentation of BAT training (§40.51(a)) • Certification that training complies with the rules. See §40.333 and §382.401.	2 years after the individual ceases to perform those functions	In a secure location with controlled access. **Note:** If combined with other files (personnel or driver qualification files, for example) then all the files must be secured.

	1. Alcohol test results* with concentration of 0.02 or more
	2. Verified positive drug test results
	3. Documentation of refusals
	4. Calibration documentation
	5. Evaluation and referral records, including:
	  ○ Records pertaining to SAP's determination of a need for assistance
	  ○ Records concerning a driver's compliance with SAP's recommendations.
	6. Records related to program administration, including:
	  ○ Agreements with collection sites, labs, BATs, MROs, and consortia
	  ○ Names and positions of officials and their role in the employer's testing
		5 years	

	program ○ Semiannual laboratory statistical summaries of urinalysis (§40.111(a)) ○ Company testing policy and procedures 7. Annual calendar year summary *"Test results" includes: • Copy of alcohol test form, with results; • Copy of drug test chain of custody form; • Documents sent to the employer by the MRO; • Documentation of any refusal to submit; • Documents provided by a driver to dispute results; and • Previous employer test results (see §§382.301(c) 40.25, and 391.23) See §40.333 and §382.401.		
	Records related to the collection process (except EBT calibration records): • Collection logbooks (if used); • Documents related to the random selection process; • Documentation of BAT training; • Documentation of reasoning for reasonable suspicion testing; • Documentation of reasoning for post–accident testing; • Documents verifying a medical explanation for the inability to provide adequate breath or urine for testing; and • Consolidated annual calendar year summaries. See §40.333 and §382.401.	2 years	
	1. Negative and cancelled drug test results* 2. Alcohol test results with concentration less than 0.02 *"Test results" includes: • Copy of alcohol test form, with results;	1 year	

	• Copy of drug test chain of custody form; • Documents sent to the employer by the MRO; • Documentation of any refusal to submit; • Documents provided by a driver to dispute results; and • Previous employer test results (see §§382.301(c) 40.25, and 391.23) See §40.333 and §382.401.		
	For employers using the exception to pre-employment testing in §382.301(b): · Names and addresses of the testing programs in which the prospective employee participated; · Verification that the driver participates or participated in the program(s); · Verification that the program(s) conforms to Part 40; · Verification that the driver is qualified under the rules of Part 40, including that the driver has not refused to be tested for controlled substances; · The date the driver was last tested for controlled substances; and · The results of any tests taken within the previous six months and any other violations of Subpart B. **Note:** An employer who uses but does not employ a driver more than once per year to operate CMVs must obtain the above information at least once every six months. See §382.301(c).	5 years for any positive results, 1 year for negative results	
Driver Training (Part 380)	Entry-level driver training certificate (§380.509).	Employment + 1 year	Personnel or Driver Qualification file
	Longer Combination Vehicle (LCV) Driver-Training Certificate (§380.401) or Certificate of Grandfathering (§380.111).	Unspecified	Driver Qualification file
	LCV driver-instructor qualification file, including: · Evidence that the instructor has met the requirements of §380.301 or §380.303; and · A copy of the individual's currently valid CDL	For as long as the company employs or uses the	LCV Driver-Instructor Qualification file or

	with the appropriate endorsements. (§391.55)	instructor	personnel file
CDLs (Part 383)	Notification for conviction for driver violations. Must include the information listed in §383.31(c). **Note:** Notifications of CDL suspensions (§383.33) have no recordkeeping requirements. See §383.31 and the interpretations to §391.27.	3 years	Driver Qualification file
Financial Responsibility (Part 387)	1. Current Form MCS-90 or MCS-82, or an FMCSA document authorizing self-insurance, for motor carriers. 2. Current Form MCS-90B or MCS-82B for passenger carriers. See §387.7(d) and §387.31(d).	Unspecified	Principal place of business
Accidents (Part 390)	1. Accident register. 2. Copies of accident reports required by states, other governmental entities, or insurers. See §390.15(b).	3 years (or one year for accidents occurring on or before 4/29/03)	Unspecified
Driver Qualification (Part 391)	1. Application for employment (§391.21), 2. Initial 3-year motor vehicle record from state(s) (§391.23(a)(1)) (must be obtained within 30 days of employment), 3. Road test form and certificate (§391.31(g)), or license or certificate accepted in lieu of road test (§391.33), 4. Medical exam certificate (original or a copy)* (§391.43(g)), 5. Any letter granting a waiver of a physical disqualification*, 6. Annual driving record* (§391.25(a)), 7. Note relating to annual review* (§391.25(c)(2)), 8. Drivers' list of violations* (§391.27), 9. Previous-employer inquiries for drivers hired before October 30, 2004 (§391.23), 10. Certificate of training, for drivers transporting highway route controlled Class 7 (radioactive) materials (§397.101(e)), and 11. Any other matter relating to a driver's qualifications or ability to drive a motor	Employment + 3 years	Driver Qualification file **Note:** May be combined with personnel file. **Note:** The long medical exam form is to be kept in the office of the medical examiner (see Medical Qualification, below).

	vehicle safely. *The following may be removed 3 years after execution: • Medical examiner's certificate, • Annual motor vehicle record from state(s), • Note relating to annual review of driving record, • Annual list of violations (prepared by the driver), and • Letter granting a waiver of a physical disqualification. See §391.51.		
	Safety performance history of driver/applicants (i.e., previous employer information), including name and address, date of contact (or attempts made), and information received about a driver/applicant (§391.23) (must be placed into file within 30 days of hire). A copy of the driver's written authorization for the motor carrier to seek information about a driver's alcohol and controlled substances history as required under §391.23(d). Corrections or rebuttals received from former or current drivers concerning their safety performance histories (§391.23(j)) (should be placed in appropriate file where corrected or rebutted information is stored). **NOTE:** Drug/alcohol inquiries sent to a driver's former employer(s) in compliance with §391.23 are deemed to be in compliance with the inquiries required under §40.25(b).	Employment + 3 years	Driver Investigation History File in a secure location with controlled access **Note:** May be combined with personnel file, Driver Qualification file, Drug/Alcohol file, etc., but must be in a secure location with limited access.
	A record of each inquiry received from other employers concerning a driver's safety performance history, and the response, including the date, the party to whom it was released, and a summary identifying what was provided (§391.23(g)(4)).	One year	Unspecified
Multiple-	Keep the following records for a multiple-	Employment +	Driver

employer drivers (Part 391)	employer driver: • Medical exam certificate, original or a copy (§391.43(g)), • Road test form and certificate (§391.31(g)), or license or certificate accepted in lieu of road test (§391.33), • Driver's name and Social Security number, and • Identification number, type, and issuing state of motor vehicle operator's license. See §391.63.	3 years	Qualification file
Drivers from other employers (Part 391)	For drivers furnished by other motor carriers, keep the signed certificate required in §391.65(a)(2). See §391.65.	3 years	Driver Qualification file
Medical Qualification (Part 391)	Driver must carry the original or a copy of the medical examiner's certificate. **Note:** The medical "long form" is not required. The long form is supposed to stay in the medical examiner's files (see the last paragraph of "Instructions for performing and Recording Physical Examinations" in §391.43). See §391.41(a).	Continuously	On driver's person
Hours of Service (Part 395)	For all 100-air-mile and 150-air-mile radius drivers, "accurate and true time records" showing: • The time the driver reports for duty each day, • The time the driver is released from duty each day, • Total number of hours on duty each day, and • Total time on duty for the preceding 7 days for drivers used for the first time or intermittently. See §395.1(e).	6 months	Unspecified
	For drivers used intermittently, a signed statement giving: • The total time on duty during the	6 months	Unspecified

	immediately preceding 7 days, and • The time at which the driver was last relieved from duty. See §395.8(j)(2).		
	Records of duty status (driver logs) and all supporting documents. "Supporting documents" are listed in Question 10 in the interpretations to Sec. 395.8. Logs must be submitted within 13 days of completion (§395.8(j)). See §395.8(k)(1).	6 months from date of receipt	Unspecified
	A copy of each log for the previous 7 consecutive days (whether hand-written or electronic) See §395.8(k)(2) and §395.15(b)(4).	7 days	In vehicle
	For companies using on-board recording devices that use location codes instead of city/state information, a list of the location codes showing all possible location identifiers. See §395.15(d)(2).	Unspecified	In vehicle and at principal place of business.
	For drivers using on-board recording devices: • An instruction sheet describing in detail how data may be stored and retrieved from the automatic on board recording system; and • A supply of blank driver's records of duty status graph grids sufficient to record the driver's duty status and other related information for the duration of the current trip. See §395.15(g).	Unspecified	In vehicle
	For companies using on-board recording devices, "a certificate obtained from the manufacturer certifying that the design of the automatic on board recorder has been sufficiently tested to meet the requirements of this section and under the conditions it will be used." See §395.15(i)(1).	Unspecified	Unspecified
	For companies using on-board recording devices, a second (back-up) copy of the electronic hours-of-	6 months	A different physical

	service files, by month. See §395.15(j)(10).		location than where the original data is stored
Inspections/ Maintenance (Part 396)	For any motor vehicle controlled for 30 days or more: • An identification of the vehicle including co. number (if so marked), make, serial number, year, and tire size, and vehicle owner's name if the motor carrier does not own the vehicle; • A means to indicate the nature and due date of the various inspection and maintenance operations to be performed; • A record of inspection, repairs and maintenance indicating their date and nature; and • A record of tests conducted on pushout windows, emergency doors, and emergency door marking lights on buses. See §396.3(b).	1 year and for 6 months after the vehicle leaves your control	Where the vehicle is either housed or maintained
	Copy of roadside inspection form. See §396.9(d)(3)(ii).	12 months from date of inspection	Principal place of business or where vehicle is housed
	1. Original DVIR (driver's vehicle inspection report), 2. Certificate of repairs, and 3. Certification of driver's review. Note pre-trip requirements in §392.7 and §396.13. Only §396.13 has recordkeeping requirements. See §396.11(c)(2) and Question 18 in the interpretations.	3 months	Principal place of business or where vehicle is housed or maintained
	Documentation of periodic inspection (a report or other document such as a sticker or decal). See §396.17(c) and §396.23(a).	Continuously	In or on vehicle
	Evidence of an individual's qualifications to conduct annual inspections.	Until 1 year after employee	Unspecified

	See §396.19(b).	stops performing inspections	
	Periodic inspection report (original or copy). See §396.21(b)(1).	14 months	Where the vehicle is housed or maintained
	Evidence of a brake inspector's qualifications. See §396.25(e).	Until 1 year after employee stops performing inspections	Principal place of business or where employee is based
Hazmat (Part 397)	Signed receipt documenting that hazmat driver has received a copy of the regulations and emergency instructions per §397.19(a). Applies to transportation of **explosives** only. See §397.19(b).	1 year	Unspecified
	A written route plan, for transporting highway route controlled Class 7 (radioactive) materials, per §397.101(d).	Unspecified.	In driver's possession, and filed with the FMCSA and shipper.
	Certificate of training, for drivers transporting highway route controlled Class 7 (radioactive) materials, per §397.101(e).	Employment + 3 years	Driver Qualification file, and in driver's immediate possession
Other (Part 379)	Business records. See Part 379 for details. This regulation is a "holdover" from when the Interstate Commerce Commission regulated trucking (before the FMCSA was created).	See regulation	See regulation

Section 17

Leasing Requirements

HHG CARRIERS

WAC 480-15-590
Lease responsibilities

A carrier must enter into an equipment lease agreement before operating a leased motor vehicle. The carrier must ensure that all of the following conditions are met:

(1) The carrier signs the form and ensures the lessor signs the form.

(2) The carrier marks "master lease" if the carrier intends to use a master lease instead of individual leases.

(3) A copy of the lease is carried in all leased motor vehicles.

(4) Copies of all leases are kept in the carrier's permanent files for at least one year after the lease expires.

(5) The carrier gives a copy of the lease to the owner of the leased motor vehicle.

(6) The carrier takes possession, control and use of the motor vehicle during the period of the lease agreement.

(7) The leased motor vehicle is properly insured as specified in WAC 480-15-530 and 480-15-550.

(8) The carrier properly identifies the motor vehicle as specified in RCW 81.80.305.

(9) The carrier charges appropriate tariff rates and charges.

(10) The driver of the leased motor vehicle is on the carrier's payroll during the leased period.

(11) The leased motor vehicle is operated in compliance with laws and rules as specified in WAC 480-15-560 and 480-15-570.

(12) The driver of the leased motor vehicle is subject to the company's alcohol and controlled substance policies.

(13) The carrier and the owner of the leased motor vehicle specify on the lease form who is responsible for all expenses relating to the leased motor vehicles.

(14) The carrier complies with the terms of the lease.

PASSENGER VEHICLES

WAC 480-30-236
Leasing vehicles

(1) A passenger transportation company operating a leased vehicle must have a written lease agreement with the owner of the vehicle.

(2) It is the company's responsibility to ensure that:

(a) A copy of the lease is carried in each leased vehicle, unless the vehicle's registration names the certificate holder as registered owner or lessee;

(b) A copy of the lease is kept in the company's files during the effective period of the lease and for at least one year after the lease expires;

(c) A copy of the lease is provided to the owner of the leased vehicle;

(d) The company has complete possession, control, and use of the motor vehicle at all times during the period of the lease;

(e) The leased motor vehicle is properly insured as specified in WAC 480-30-191;

(f) The leased vehicle is properly identified as specified in WAC 480-30-231;

(g) The leased vehicle is operated in compliance with all safety laws and rules, including those regarding vehicle inspection, records, and maintenance; and

(h) The terms of the lease are followed.

(3) If a company leases a vehicle with a driver, the company must also ensure that:

(a) The driver of the leased motor vehicle is on the company's payroll during the lease period;

(b) The driver operates in compliance with all driver qualification, safety and hours of service laws and rules;

(c) The driver is subject to the company's alcohol and controlled substance policies; and

(d) The company maintains appropriate files and paperwork on the driver for a period of at least one year following the expiration of the lease.

(4) The company and the owner of the leased vehicle must specify in the lease who is responsible for all expenses relating to the leased motor vehicle. The lease must contain all information shown in the following sample lease form. If a company uses an alternate form, the company must ensure the alternate form contains all information requested on the sample. These requirements do not apply to substitute vehicles or vehicles leased without drivers from a person principally engaged in the business of leasing vehicles.

SOLID WASTE VEHICLES

WAC 480-70-211
Leasing vehicles

(1) A company operating a leased vehicle must have a written lease agreement with the owner of the vehicle.

(2) It is the company's responsibility to ensure that:

(a) A copy of the lease is carried in each leased vehicle;

(b) A copy of the lease is kept in the company's files during the effective period of the lease and for at least one year after the lease expires;

(c) A copy of the lease is provided to the owner of the leased vehicle;

(d) The company has complete possession, control, and use of the motor vehicle during the period of the lease;

(e) The leased motor vehicle is properly insured as specified in WAC 480-70-181;

(f) The leased vehicle is properly identified as specified in WAC 480-70-206;

(g) The leased vehicle is operated in compliance with all safety laws and rules, including those regarding vehicle inspection, records, and maintenance; and

(h) The terms of the lease are followed.

(3) If a company leases a vehicle with a driver, the company must also ensure that:

(a) The driver of the leased motor vehicle is on the company's payroll during the lease period;

(b) The driver operates in compliance with all driver qualification, safety and hours of service laws and rules;

(c) The driver is subject to the company's alcohol and controlled substance policies; and

(d) The company maintains appropriate files and paperwork on the driver for a period of at least one year following the expiration of the lease.

(4) The company and the owner of the leased vehicle must specify in the lease who is responsible for all expenses relating to the leased motor vehicle. The lease must contain all information shown in the following sample lease form. If a company uses an alternate form, the company must ensure the alternate form contains all information requested on the sample.

EQUIPMENT LEASE

EQUIPMENT LEASE

A copy of this lease must be carried in the leased vehicle. Copies must also be maintained in the files of both parties for the length of the lease plus one year following the expiration of the lease.

Name and address of company leasing vehicle (lessee):		Permit number:
Name and address of party from whom the vehicle is being leased (lessor):		Permit number, if any:
Vehicle make and year:	Vehicle Serial Number:	Vehicle License Number:

The lease will become effective at . . . . . (time) on . . . . . (date), and will continue until . . . . . (date) unless canceled in writing before that date.

Compensation that will be paid to owner of vehicle (lessor): $ . . . . . per . . . . . .

If lease also includes driver, compensation for driver: $ . . . . . per . . . . . .

Lessee/Lessor Expense Agreement

Place an "x" or a checkmark next to each item indicating whether the lessee or lessor is responsible for the listed expense.

Item	Lessee	Lessor	Item	Lessee	Lessor
Vehicle Licensing Fees			Equipment Rental Taxes		
Toll and Ferry Charges			Fuel and Oil		
Vehicle Loan Payments			Vehicle Maintenance		
Parts & Tires			Major Vehicle Repairs		

Insurance, Comprehensive			Minor Vehicle Repairs		
Insurance, Theft			Other (explain):		
Insurance, Fire			Other (explain):		

Under the terms of this lease, the lessee must:

- Have complete possession, control and use of the vehicle during the lease period;
- Be in complete control of all operations;
- Provide liability and property damage insurance;
- Ensure that the driver of the leased vehicle is an employee of the lessee;
- Ensure that the vehicle is properly identified;
- Comply with all safety regulations; and
- Bill and collect proper tariff rates and charges.

The parties signing this lease certify that the information shown above is true and correct, that the provisions of the lease will be enforced by both parties, and that all operations conducted with the leased equipment will be conducted in compliance with applicable laws and rules.

Lessee Signature/Title . . . . . date signed . . . . . .

Lessor Signature/Title . . . . . date signed . . . . . .

Section 18

CSA

(Compliance, Safety & Accountability)

CSA
COMPLIANCE SAFETY & ACCOUNTABILITY

Compliance, Safety, Accountability (CSA) is a Federal Motor Carrier Safety Administration (FMCSA) initiative to improve large truck and bus safety and ultimately reduce crashes, injuries, and fatalities that are related to commercial motor vehicles.

Carriers are scored from data collected from on-road enforcement.

Measurement - CSA measures safety performance, using inspection and crash results to identify carriers whose behaviors could reasonably lead to crashes.

Evaluation - CSA helps FMCSA and its State Partners to correct high-risk behavior by contacting more carriers and drivers–with interventions tailored to their specific safety problem, as well as a new Safety Fitness Determination methodology.

Intervention - CSA covers the full spectrum of safety issues, from how data is collected, evaluated, and shared to how enforcement officials can intervene most effectively and efficiently to improve safety on our roads.

Within the Compliance, Safety, Accountability (CSA) Operational Model, the Safety Measurement System (SMS) quantifies the on-road safety performance of carriers and drivers to identify candidates for interventions, determine the specific safety problems that a carrier or driver exhibits, and to monitor whether safety problems are improving or worsening. SMS has replaced SafeStat in the new Operational Model.

SMS uses a motor carrier's data from roadside inspections, including all safety-based violations, State-reported crashes, and the Federal motor carrier census to quantify performance in the following Behavior Analysis and

Safety Improvement Categories (BASICs).

CSA BASICs:

Unsafe Driving — Operation of commercial motor vehicles (CMVs) by drivers in a dangerous or careless manner. *Example violations:* Speeding, reckless driving, improper lane change, and inattention. (FMCSR Parts 392 and 397)

Hours-of-Service (HOS) Compliance — Operation of CMVs by drivers who are ill, fatigued, or in non-compliance with the HOS regulations. This BASIC includes violations of regulations pertaining to records of duty status (RODS) as they relate to HOS requirements and the management of CMV driver fatigue *Example violations:* HOS RODS, and operating a CMV while ill or fatigued. (FMCSR Parts 392 and 395)

Driver Fitness — Operation of CMVs by drivers who are unfit to operate a CMV due to lack of training, experience, or medical qualifications. *Example violations:* Failure to have a valid and appropriate commercial driver's license (CDL) and being medically unqualified to operate a CMV. (FMCSR Parts 383 and 391)

Controlled Substances/Alcohol — Operation of CMVs by drivers who are impaired due to alcohol, illegal drugs, and misuse of prescription or over-the-counter medications. *Example violations:* Use or possession of controlled substances/alcohol. (FMCSR Parts 382 and 392)

Vehicle Maintenance — Failure to properly maintain a CMV and/or properly prevent shifting loads. *Example violations:* Brakes, lights, and other mechanical defects, failure to make required repairs, and improper load securement. (FMCSR Parts 392, 393 and 396)

Hazardous Materials (HM) Compliance — Unsafe handling of HM on a CMV. *Example violations:* Release of HM from package, no shipping papers (carrier), and no placards/markings when required. (FMCSR Part 397 and Hazardous Materials Regulations Parts 171, 172, 173, 177, 178, 179, and 180)

Crash Indicator — Histories or patterns of high crash involvement, including frequency and severity. It is based on information from State-reported crashes

A carrier's measurement for each BASIC depends on the following:

- The number of adverse safety events (violations related to that BASIC or crashes)
- The severity of violations or crashes
- When the adverse safety events occurred (more recent events are weighted more heavily).

After a measurement is determined, the carrier is then placed in a peer group (e.g., other carriers with similar numbers of inspections). Percentiles from 0 to 100 are then determined by comparing the BASIC measurements of the carrier to the measurements of other carriers in the peer group. A percentile 100 indicates the worst performance.

Intervention

The Federal Motor Carrier Safety Administration (FMCSA) and State Partners use measurement results to identify carriers for Compliance, Safety, Accountability (CSA) interventions. These interventions offer an expanded suite of tools ranging from warning letters to onsite comprehensive investigations. These tools supplement the former labor-intensive compliance review (CR) to better address the specific safety problems identified.

CSA investigators are equipped to systematically evaluate why safety problems are occurring, recommend remedies, encourage corrective action(s), and, where corrective action is inadequate, invoke strong penalties. Interventions provide carriers with the information necessary to understand their safety problems and to change unsafe behavior early on. Interventions under CSA are categorized into early contact, investigation, and follow-on, which are described in detail bellow.

Early Contact

Warning Letter - Correspondence sent to a carrier's place of business that specifically identifies an alerted Behavior Analysis and Safety Improvement Category (BASIC) and outlines possible consequences of continued safety problems. The warning letter provides instructions for accessing carrier safety data and measurement as well as a point-of-contact.

Carrier Access to Safety Data and Measurement - Carriers have access to their measurement results (BASICs scores), as well as the inspection reports and violations that went into those results. With this information, carriers can chart a course of self-improvement. Carriers can also monitor this data for accuracy and challenge it as necessary through FMCSA's DataQs system: https://dataqs.fmcsa.dot.gov/login.asp.

Targeted Roadside Inspection - CSA provides roadside inspectors with data that identifies a carrier's specific safety problems, by BASIC, based on the new measurement system. Targeted roadside inspections occur at permanent and temporary roadside inspection locations where connectivity to the SMS information is available. As Commercial Vehicle Information Systems and Networks (CVISN) technologies evolve, they will be incorporated into the roadside inspections.

Investigation

Offsite Investigation - A carrier is required to submit documents to FMCSA or a State Partner. These documents are used to evaluate the safety problems identified through the SMS and to determine their root causes. Types of documents requested may include third-party documents such as toll receipts, border crossing records, or drug testing records. The goal is to identify issues responsible for may be subject to an onsite investigation or to subpoena records (see below).

Onsite Focused Investigation - The purpose of this intervention is to evaluate the safety problems identified through the SMS and their root causes. An onsite focused investigation may be selected when alerts in one or two BASICs exist. Onsite "focused" investigations target specific problem areas (for example, maintenance records), while onsite "comprehensive" investigations address all aspects of the carrier's operation.

Onsite Comprehensive Investigation - This intervention is similar to a CR and takes place at the carrier's place of business. It is used when the carrier exhibits broad and complex safety problems through continually alerted BASICs, worsening multiple BASICs (three or more), or a fatal crash or complaint.

Follow-on

Cooperative Safety Plan (CSP) - Implemented by the carrier, this safety improvement plan is voluntary. The carrier and FMCSA collaboratively create a plan based on a standard template to address the underlying problems resulting from the carrier's substandard safety performance.

Notice of Violation (NOV) - The NOV is a formal notice of safety alerts that requires a response from the carrier. It is used when the regulatory violations discovered are severe enough to warrant formal action but not a civil penalty (i.e., a fine). It is also used in cases where the violation is immediately correctable and the level of, or desire for, cooperation is high. To avoid further intervention, including fines, the carrier must provide evidence of corrective action or initiate a successful challenge to the violation.

Notice of Claim (NOC) - An NOC is issued in cases where the regulatory violations are severe enough to warrant assessment and issuance of civil penalties.

Operations Out-of-Service Order (OOS) - An OOS order is an order requiring the carrier to cease all motor vehicle operations.

SAFETY MANAGEMENT CYCLE

The Safety Management Cycle (SMC) is the signature tool behind the Federal Motor Carrier Safety Administration's (FMCSA) investigative process. FMCSA designed the SMC to help Safety Investigators (SIs) and motor carriers improve safety by identifying and correcting safety performance and compliance issues.

***CHECK YOUR SMS SCORES ON A REGULAR BASIS:**

www.fmcsa.dot.gov/sms

Type in your USDOT # and click on search

Check your SMS scores monthly

Familiarize yourself with this web site and CSA

Notes

Notes

Notes

Notes